LUDLUM MODEL 375P SERIES
RADIATION DETECTOR SYSTEMS

Includes Model 375P-336, 375P-500, 375P-600, 375P-1000, 375P-2000 & 375P-3500 Series

June 2023

Serial Number 351649 and Succeeding

Serial Numbers

LUDLUM MODEL 375P SERIES
RADIATION DETECTOR SYSTEMS

Includes Model 375P-336, 375P-500, 375P-600, 375P-1000, 375P-2000 & 375P-3500 Series

June 2023

Serial Number 351649 and Succeeding

Serial Numbers

LUDLUM MEASUREMENTS, INC
501 OAK STREET, P.O. BOX 810
SWEETWATER, TEXAS 79556
325-235-5494, FAX: 325-235-4672

STATEMENT OF WARRANTY

Ludlum Measurements, Inc. warrants the products covered in this manual to be free of defects due to workmanship, material, and design for a period of twelve months from the date of delivery. The calibration of a product is warranted to be within its specified accuracy limits at the time of shipment. In the event of instrument failure, notify Ludlum Measurements to determine if repair, recalibration, or replacement is required.

This warranty excludes the replacement of photomultiplier tubes, G-M and proportional tubes, and scintillation crystals which are broken due to excessive physical abuse or used for purposes other than intended.

There are no warranties, express or implied, including without limitation any implied warranty of merchantability or fitness, which extend beyond the description of the face there of. If the product does not perform as warranted herein, purchaser's sole remedy shall be repair or replacement, at the option of Ludlum Measurements. In no event will Ludlum Measurements be liable for damages, lost revenue, lost wages, or any other incidental or consequential damages, arising from the purchase, use, or inability to use product.

RETURN OF GOODS TO MANUFACTURER

If equipment needs to be returned to Ludlum Measurements, Inc. for repair or calibration, please send to the address below. All shipments should include documentation containing return shipping address, customer name, telephone number, description of service requested, and all other necessary information. Your cooperation will expedite the return of your equipment.

LUDLUM MEASUREMENTS, INC.
ATTN: REPAIR DEPARTMENT
501 OAK STREET
SWEETWATER, TX 79556

800-622-0828 325-235-5494
FAX 325-235-4672

REV #	ALTERATIONS	DATE	BY
	VALID	2/7/05	DDW
2	UPDATED FRONT PANEL	7/28/05	DDW
3	ADDED CONNECTORS	8/5/05	DDW

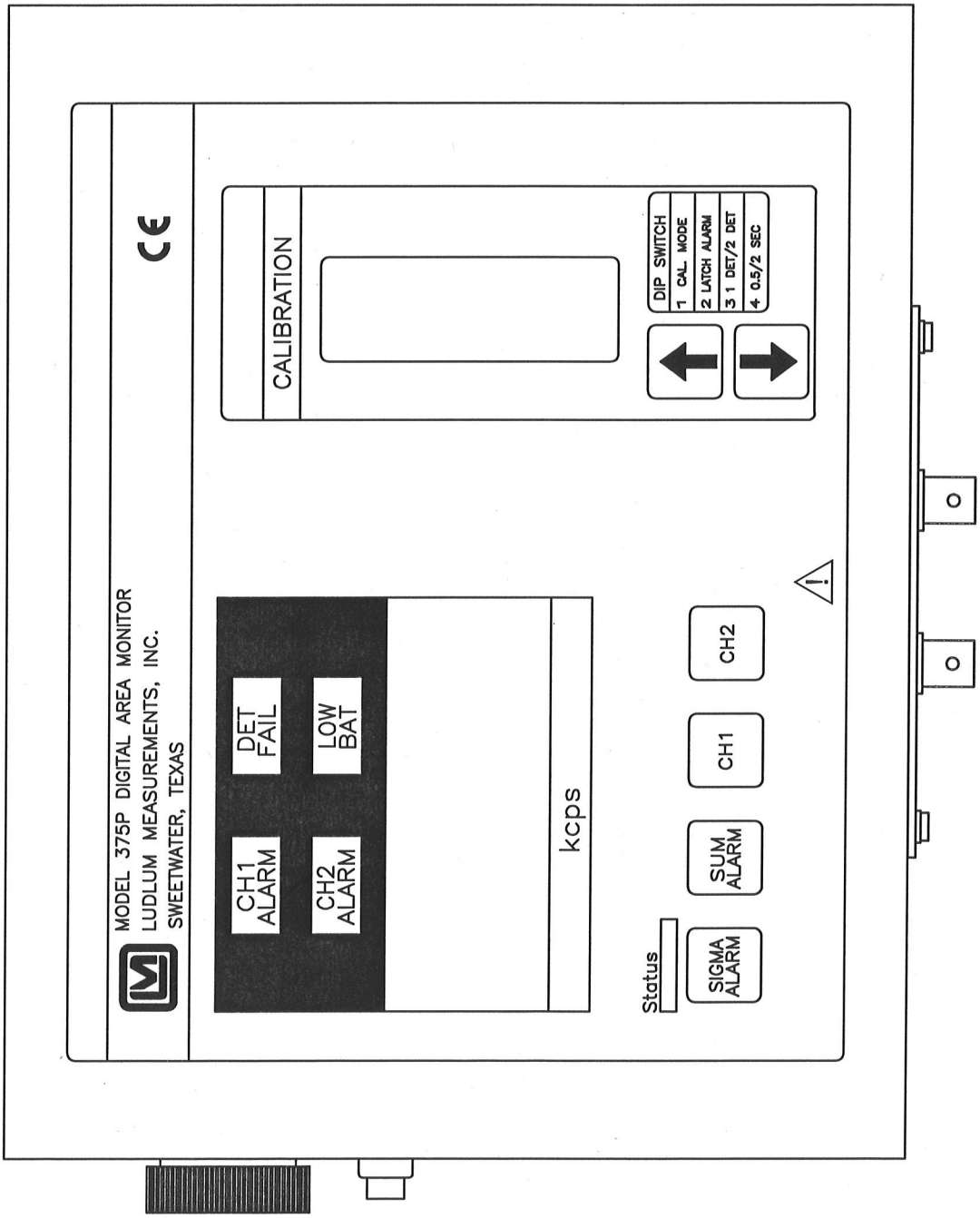

DWN	DATE	CHECKED	APPROVED
DDW	8/5/05		8/5/05

TITLE: M 375P FRONT PANEL

LUDLUM MEASUREMENTS, INC.
501 OAK STREET
SWEETWATER, TEXAS 79556

SERIES	SHEET
396	725

Table of Contents

Section

1

Introduction

The Model 375P Radiation Detector System is designed for visibility and ease of use. Featuring a wall-mount chassis, the Model 375P has a four-digit LED display that is readable from 30 feet away. Backlit indicators warn of detector failure (red), channel 1 radiation alarm (red), channel 2 radiation alarm (red), and low battery (yellow). A green status light is a positive indication of instrument operation. Parameters are protected under a calibration cover. Change of alarm points are easily accomplished by using the pushbuttons to increment and decrement the parameters.

Parameters are stored in non-volatile memory and are retained even with power disconnected. The battery backup provides 24 hours of additional use after the primary power is removed (in a non-alarming condition). Relay output to power a horn and/or strobe light is available by way of a 3-pin connector.

Three common Model 375P systems are:

The Model 375P-336, utilizing two plastic detectors; suitable for indoor mounting, as in a hallway or other entry point.

The Model 375P-1000, utilizing two plastic detectors; suitable for outdoor mounting.

The Model 375P-3500, utilizing a large plastic scintillation detector; suitable for industrial sites and conveyor monitoring.

The Model 375P-336-1 is a version of the Model 375P-336 that utilizes weatherproof detector enclosures to allow for use outdoors. The detector enclosures for the 375P-336 are not recommended for outdoor use. The specifications for the Model 375P-336-1 are otherwise identical to the Model 375P-336, except for the beta response.

Another version of the Model 375P-336 is the Model 375P-336-2. It can be used outdoors, similar to the Model 375P-336-1, except that the detectors are housed in round PVC pipe instead of rectangular aluminum.

There is also a Model 375P-500 series. The Model 375P-500 is a dust monitor conveyor suitable for outdoor mounting and utilizes one plastic detector. The Model 375P-500/M is similar but with increased magnetic shielding.

We also have a Model 375P-2000 series. It is like the Model 375P-1000 except that it has four 7866 cm^3 (480 in^3) plastic scintillation detectors with 0.33 cm (0.13 in.) lead shielding in weathertight housing while the 375P-1000 has two of those detectors.

The Model 375P-600 is a scale monitor that uses one plastic detector. The Model 375P-600-1 is a gate or conveyor monitor with PVC housing for outdoor use.

These Model 375P detector configurations are detailed in this manual. Consult the accompanying detector manual and/or Ludlum Measurements Engineering Department for questions relating to detector configurations not listed in this manual.

Section

2

Getting Started

The Model 375P Radiation Detector System is designed for ease of use. This section of the manual is designed to help the first-time user get started. Initial power-up and basic features of the Model 375P will be discussed in this section. Other sections of the manual provide more detailed information.

External Detectors

The Model 375P utilizes a low-voltage interface (nominally 12 Vdc) for connection of one or more external detectors. The detectors used are often large plastic scintillators, which typically connect to the Model 375P by way of cables with BNC type connectors.

If you have an external detector, use the cable provided to connect it to the Model 375P.

Note:

Splicing or re-terminating cables must be done carefully. Improper termination will result in the "shorting-out" of the detector voltage, a DET FAIL and/or blown-fuse condition.

Power Up

Caution!

Verify instrument voltage input rating before connecting to a power converter. If the wrong power converter is used, the instrument and/or power converter could be damaged.

Plug the power cord into a suitable 120 Vac outlet. If the RS-232 feature is used, plug in a suitably wired 9-pin connector cable. (See Page 3-3 for the pin assignment of the 9-pin connector.) Turn power ON with the left side panel switch. Do not turn power OFF unless the unit is to be removed from service.

Initial power-up will momentarily turn on the internal front-panel lights, sound the audio, and display "8888" on the four-digit LED display. The firmware version number (39665Nyy) is then displayed as "396" and "65yy" (where yy represents the current version number). The readout will be blanked, and will then display a 60-second countdown (60 to 0) while a background count is taken.

When the instrument has finished measuring background, it will display the current radiation reading (summed from both detectors) and begin checking for an alarm condition.

Alarm Calculations

The Model 375P has two alarm set points, one for SIGMA ALARM and one for SUM ALARM. The SUM ALARM is most useful as an upper limit for background radiation. If the "summed" detector reading increases above the set SUM ALARM point, then both CH1 ALARM and CH2 ALARM will activate.

Note:

> Since its response time (from 10-90% full response) is approximately 60 seconds, the SUM ALARM is not good for detecting sources that are moving quickly through the detectors.

In contrast, the SIGMA ALARM is a fast-acting alarm. Depending on the fourth dipswitch setting, readings will be based on either 0.5 or 2.0 seconds. The SIGMA ALARM is based on the square root of background radiation for each detector.

Formula

> alarm point = Bkg + (sigma alarm × sqroot (Bkg)).

When calculating the ALARM POINT, ensure that the Bkg number is in counts per 0.5 or 2.0 seconds (set by the fourth dipswitch).

Example

In order to set the sigma alarm for four times the background:

- Assume that the Model 375P display shows a background of 21.0 kcps, which is the sum of two detectors. Alternatively, you can multiply the CH1 reading by 2, and that is the number you would use for sigma calculations.

- Assuming the background count rate shown above, determine the desired sigma size in kcps by multiplying the background number by the desired sigma number (in this case, 4).

  21 kcps times 4 = 84 kcps

  Then subtract background from that number

  84 kcps – 21 kcps = 63 kcps

  That is the amount of increase desired.

- Thus, the sigma alarm should be set for 63 kcps above the background of 21 kcps.

- If the dip switch is switched to 2 seconds, then we can use the numbers above. If it is set to 0.5 seconds, then all of the numbers above have to be divided by 4 (since 0.5 is ¼ of 2).

- At a background of 21,000, one sigma = square root of 21,000 = 145. Divide the amount of increase desired by the background sigma 63 kcps/145 = 434 sigma

- ALARM POINT = Bkg + (SIGMA ALARM x SQROOT (Bkg))
  21 kcps + (434 sigma x 145) = 84 kcps

Operational Check

The operational check is an important assurance that the radiation detectors and electronics are working correctly.

Note:

> Ludlum Measurements suggests that an operational check be performed on a daily basis; local procedures may supersede. Ludlum Measurements foresees no need for complete instrument recalibration as long as the instrument passes this check without indications of failure.

For the operational check, it is necessary to use the radiation check source provided with the instrument to ensure proper alarm function. When not being used, store the check source in a secure area.

Note:

> LMI check sources present very minimal risks and are therefore unlicensed (Exempt Quantity Sources reference: 10 CFR 30.71 Schedule B). The radioactive element is sealed (permanently bonded or fixed inside a capsule), so you need not wash your hands after handling. Radiation exposure while handling this source is very minimal with no identified long or short-term risks. Although the amount of radiation given off by exempt sources is so low that it presents no significant hazard, they should be handled with care and respect. Time, distance, and shielding are the best ways to control exposure.

1. Taking the source in hand, place it so that it is located on the front part of the detector. Hold it there for approximately five seconds and then remove the source from the detector.

Note:

The alarm circuit should activate, causing the audio to sound and the CH1 ALARM and/or CH2 ALARM lights to illuminate. Any remote alarm indicators should also be activated. *(i.e. strobe or horn if applicable*).

2. Press any front-panel button, and all alarm indicators should go off, including any remote strobe or horn that is connected (if applicable).

Note:

If the alarm is unlatched, the alarm condition will clear automatically when the source is removed.

Repeat the procedure for the other detector if it was not triggered by the first test.

Checking Parameters

Check the sigma alarm point setting by pressing the SIGMA ALARM button. The sigma alarm point will be displayed as long as the button is pressed. The sigma alarm point can be set from 0.1 to 999 sigma. A setting of 5.0 is normally about as low as can be set without having too many false alarms.

Check the sum alarm point setting by pressing the SUM ALARM button. The sum alarm point will be displayed as long as the button is pressed. The high alarm point is in units of kcps (kilo counts per second). The high-alarm point can be set from 0.1 to 9999 kcps.

Check the current detector reading on channel 1 by pressing the CH1 button. The current reading will be displayed as long as the button is pressed. The reading is in units of kcps (kilo counts per second).

Check the current detector reading on channel 2 by pressing the CH2 button. The current reading will be displayed as long as the button is pressed. The reading is in units of kcps (kilo counts per second).

Options

When the calibration cover is removed, a four-pole dipswitch becomes accessible, which is used to activate or deactivate options. The four options are: cal mode, latch alarm, # of det, and ½sec-2sec.

1. Switching the top CAL MODE switch to the right places the instrument into calibration mode. Parameters can only be changed while the instrument is in calibration mode. In addition, when in cal mode the display will not blank when using the battery. Moving the cal mode switch back to the left locks the current parameters, preventing further changes.

Note:

The top dipswitch (CAL MODE) should be moved to the right prior to connecting to a printer.

2. The second switch, LATCH ALARM, changes the alarm to a latching alarm. When switched to the left, the alarm is non-latching, meaning it automatically turns off when the radiation level drops below the alarm point. When switched to the right, the alarm light and audio is latched until either the SIGMA ALARM or SUM ALARM button is pressed.

3. The third switch, # OF DET, selects the number of detectors used. To use only one detector, switch the # OF DET switch to the left. To use two detectors, switch the # OF DET switch to the right. This switch can be useful if one detector of a two-detector system is damaged. If that becomes the case, put the working detector into the first channel, move the switch to the left, and the system will operate with the remaining working detector.

4. The fourth switch, ½SEC-2SEC, selects the calculation time for the alarm. The ½SEC position means that the alarm is calculated every ½ second, which gives a fast response. The 2SEC position means that the alarm is calculated more slowly (every two seconds). The tradeoff between these two positions is speed versus sensitivity.

RS-232 Output

Printer

With the CALMODE dipswitch switched to the right, the Model 375P may be attached to a printer. The alarm printer output looks like this:

```
0023.4 ALARM
BKG 0210 0238
ALM 0350 0388
MAX 0750 0295
```

The first line shows the display reading (normally in kcps).

The next three lines show the individual detector readings. These readings are in counts per 0.5 or 2.0 seconds, depending on the fourth dipswitch setting.

The BKG line shows the radiation background level, or "baseline".

The next line, ALM, shows the alarm point.

The last line, MAX, shows the readings that caused the alarm.

In the above example, the SIGMA ALARM is 10.0. So, for CH1:

ALM =10 × SQROOT(BKG) + BKG, and 350 =10 × 14 + 210

Furthermore, when the system alarmed, CH1 had a "MAX" reading of 750, or nearly twice the alarm point.

Computer Output

With the CAL MODE dipswitch in the left position the Model 375P dumps RS-232 data onto pin 4 of the 9-pin connector every two seconds. The communication parameters 2400 baud, 8 data bits, no parity, 1 stop bit, and no hardware handshaking.

Printer DIP Switch Settings

Citizen Dot Matrix Printer Model CBM-910 Type II

This optional printer is available in the regular 115 VAC version (Part # 4558-220) or the 220 VAC version (Part # 4558-220-01).

Please refer to page 32 of the printer user's manual for the location of the DIP Switches. Switches 2, 3, and 6 should be in the ON position (toward the

back of the printer). Switches 1, 4, 5, 7, and 8 should be in the OFF position (toward the front of the printer).

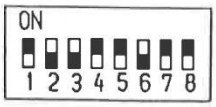

Section

3

Specifications

Sensitivity: The Model 375P incorporates very sensitive detectors and sensitivity sophisticated electronics. The following tests were performed at Ludlum Measurements, Inc., and the results of these tests should be considered typical of the Model 375P.

Dynamic Sensitivity Test: The dynamic sensitivity test was conducted with the detectors mounted on either side of a 1.5 meter (5-foot) hallway, with a 5 μCi ^{137}Cs source passed down the center of the hallway at approximately 3 mph. The results were as follows:

SYSTEM	ALARMPT	SOURCE DETECTED
375P-336	6 Sigma	5 out of 5 passes
375P-1000	6 Sigma	5 out of 5 passes
375P-3500	6 Sigma	5 out of 5 passes

Static Sensitivity Test: The following test was conducted by making a slow approach towards a single detector. Distance stated is measured from source to detector at time of alarm.

System	Source Distance	Alarm PT
375P-336	84 μCi ^{241}Am 1.63 m (5.3 ft)	6 Sigma
375P-1000	84 μCi ^{241}Am 3.4 m (11 ft) (18.3 m [60 ft] w/o PVC enclosure)	6 Sigma
375P-3500	84 μCi ^{241}Am 9.1 m (30 ft)	6 Sigma
375P-336	5 μCi ^{137}Cs 1.5 m (60 in.)	6 Sigma
375P-1000	5 μCi ^{137}Cs 1.8 m (72 in.)	6 Sigma
375P-3500	5 μCi ^{137}Cs 3 m (118 in.)	6 Sigma

Theoretical Sensitivity: Given the following typical data:

SYSTEM	BKGND	^{137}Cs Sensitivity
375P-336	0.8 kcps	0.2 kcps per μR/hr
375P-1000	2.0 kcps	0.4 kcps per μR/hr
375P-3500	5.0 kcps	2.0 kcps per μR/hr

…a six sigma alarm point (with the #4 dipswitch on S512 to the right, or second position) results in the following sensitivity:

SYSTEM	μR/hr at detector to cause alarm
375P-336	0.60 μR/hr above background
375P-1000	0.47 μR/hr above background
375P-3500	0.15 μR/hr above background

Power: Input power is by way of the IEC 320 AC power receptacle. Required power is 120 VAC at less than 10 watts. Non-alarm battery current consumption at 6 Vdc is 90 mA. Alarming current consumption at 6 Vdc is 250 mA.

Range: The Model 375P operates within a four-decade display range of 0.1 to 999.9 kcps.

Battery Backup: The battery backup is a 3000 mA sealed lead rechargeable battery. The battery is recharged by way of an onboard trickle charger. Battery life is 24 hours under non-alarm conditions, and six hours under alarm conditions. The display is blanked under non-alarm conditions when under battery power. Blanking is suppressed while the CAL MODE switch is switched to the right.

Warning!:

Only certified technician or calibration personnel should replace battery.

Status: A green light indicates proper instrument operation. A red DET FAIL light warns of improper operation: internal failure or no counts within a 15-second period. A yellow LOW BAT light warns of a low battery and will also trigger the DET FAIL light.

Audio Output: The Model 375P has an audible alarm on either SIGMA ALARM or SUM ALARM. The audio intensity can be changed by rotating the baffle on the audio device.

RS-232 Output: The Model 375P has two modes of RS-232 output (see Section 2, Subsection "RS-232 Output" for further information):

1. A two-second dump (for computer data logging)
2. An alarm printout (for a hardcopy printer).

Over-range: When dead time correction accounts for more than 75% of the displayed reading, the instrument is in over-range. During over-range the display will show "----" and the low alarm and high alarm will be activated.

Calibration Controls: Remove the calibration cover to expose the calibration controls. The calibration controls include the up/down buttons, a calibration potentiometer, and the option dipswitch. The calibration potentiometer is detailed on the following page.

Warning!

> Do not touch the circuit board in the calibration window due to potential for electric shock.

BAT CHARGE: Used to set the backup battery trickle charging voltage. It is set to 6.9 Vdc while the battery is disconnected.

Connector Wiring and Pin Assignments

9-pin Data Connector: The 9-pin connectors provide for output signals from the instrument and input voltage to the instrument. The assignments are as follows:

pin1-	+BATTERY
pin2-	GND IN
pin3-	FAIL_L
pin4-	RS232 DUMPOUT

pin5-	(not used)
pin6-	ALARM2_L
pin7-	ALARM1_L
pin8-	EXT RESET_L
pin9-	+5VDC OUT

The FAIL and ALARM digital signal outputs are open drain 2N7002 outputs, able to sink about 50 mA each.

Mains Relay Out: Supplies mains voltage (normally 120 Vac) to alarm on 3-pin connector. This 3 pin connector is wired as follows:

Pin 1- black HOT 120 Vac on HIGH ALARM

Pin 2- white NEUTRAL

Pin 3- green EARTH GROUND

Detectors

Model 375P-336: 2753 cm^3 (168 in^3) shielded plastic scintillation detector (2 each)

Model 375P-500: 7865 cm^3 (480 in^3) shielded plastic scintillation detector (1 each)

Model 375P-600: 10,323 cm^3 (630 in^3) shielded plastic scintillation detector (1 each)

Model 375P-600-1: 9832 cm^3 (600 in^3) shielded plastic scintillation detector (1 each)

Model 375P-1000: 7865 cm^3 (480 in^3) shielded plastic scintillation detector (2 each)

Model 375P-2000: 7865 cm^3 (480 in^3) shielded plastic scintillation detector (4 each)

Model 375P-3500: 57355 cm^3 (3500 in^3) shielded plastic scintillation detector (1 each)

Dimensions

Model 375P Electronics: 26.2 x 24.6 x 8.4 cm (10.3 x 9.7 x 3.3 in.) (H x W x D)

Model 375P-336 Detectors: 104.1 x 17.1 x 5.3 cm (41 x 6.8 x 2.1 in.) (H x W x Dia), Overall: 2753 cm^3 (168 in^3)

Model 375P-500 Detector: 183 x 20.3 cm (72 x 8 in.) (H x Dia) Overall: 7866 cm^3 (480 in^3)

Model 375P-600 Detector: 38 x 71 x 3.8 cm (15 x 28 x 1.5 in.) (H x W x Dia) Overall: 10,323 cm^3 (630 in^3)

Model 375P-600-1 Detector: 152 x 12.7 x 5.1 cm (60 x 5 x 2 in.) (H x W x Dia) Overall: 9832 cm^3 (600 in^3)

Model 375P-1000 & 375P-2000 Detectors: 183 x 20.3 cm (72 x 8 in.) (H x Dia) Overall: 7866 cm^3 (480 in^3)

Model 375P-3500 Detectors: 208 x 62.2 x 22.9 cm (82 x 24.5 x 9 in.) (H x W x D)

Weights

Model 375P Electronics: 4.2 kg (9.3 lb)

Model 375P-336 Detectors: 11.3 kg (25 lb) each

Model 375P-500, 375P-1000, and 375P-2000 Detectors: 29.5 kg (65 lb) each

Model 375P-3500 Detectors: 295 kg (650 lb)

Section 4

Safety Considerations

Environmental Conditions for Normal Use

Indoor use only for 375P-336 & 375P-600, outdoor use for Model 375P-500, 375P-600-1, 375P-1000 and 375P-3500 detectors

No maximum altitude

Temperature range of –15 to 50 °C (5 to 122 °F)

Maximum relative humidity of less then 95% (non-condensing)

Mains supply voltage range of 95-135 VAC (178-240 VAC available), 50/60Hz single phase (less than 100 mA typical, 1 amp max)

Maximum transient voltage of 1500 VAC

Installation Category II (Overvoltage Category as defined by IEC 1010-1)

Pollution Degree 3 for 375P-336 and 375P-600 (as defined by IEC 664). (Occurs when conductive pollution or dry nonconductive pollution becomes conductive due to condensation. This is typical of industrial or construction sites.)

Pollution Degree 4 for 375P-500, 375P-600-1, 375P-1000, 375P-2000 and 375P-3500 (as defined by IEC 664). (The pollution generates persistent conductivity caused by conductive dust, rain, or snow.)

Cleaning Instructions and Precautions

The Model 375P may be cleaned externally with a damp cloth, using only water as the wetting agent. Do not immerse the instrument in any liquid. Observe the following precautions when cleaning:

1. Turn the instrument OFF and disconnect the instrument power cord.
2. Allow the instrument to sit for one minute before cleaning.

Warning Markings and Symbols

Caution!

The operator or responsible body is cautioned that the protection provided by the equipment may be impaired if the equipment is used in a manner not specified by Ludlum Measurements, Inc.

The Model 375P is marked with the following symbols:

ALTERNATING CURRENT (AC) (IEC 417, No. 5032): designates an input receptacle that accommodates a power cord intended for connection to AC voltages. This symbol appears on the side panel.

PROTECTIVE CONDUCTOR TERMINAL (per IEC 417, No. 5019): designates the central grounding point for the safety ground. This symbol is visible inside the chassis.

CAUTION (per ISO 3864, No. B.3.1): designates hazardous live voltage and risk of electric shock. During normal use, internal components are hazardous live. This instrument must be isolated or disconnected from the hazardous live voltage before accessing the internal components. This symbol appears on the front panel. **Note the following precautions:**

Warning!

Do not touch the circuit board in the calibration window due to potential for electric shock.

Caution!

Verify instrument voltage input rating before connecting to a power converter. If the wrong power converter is used, the instrument and/or power converter could be damaged.

Warning!

The operator is strongly cautioned to take the following precautions to avoid contact with internal hazardous live parts that are accessible using a tool:

1. Turn the instrument power OFF and disconnect the power cord.

2. Allow the instrument to sit for one minute before accessing internal components.

The "**crossed-out wheelie bin**" symbol notifies the consumer that the product is not to be mixed with unsorted municipal waste when discarding. Each material must be separated. The symbol is placed near the AC receptacle. See section 6, "Recycling," for further information.

Electrical Safety Precautions

Warning!

Observe the following instructions to avoid a potentially hazardous situation, which, if mishandled, could result in death or serious personal injury, as well as property damage.

- Do not expose the unit to rain or an environment where it may be splashed by water or other liquids, as doing so may result in fire or electric shock.

- Use the unit only with the voltage specified on the unit. Using a voltage higher than that which is specified may result in fire or electric shock.

- Do not cut, kink, or otherwise damage nor modify the power supply cord. IN addition, avoid using the power cord in close proximity to heaters, and never place heavy objects – including the unit itself – on the power cord, as doing so may result in fire or electric shock.

- Avoid installing or mounting the unit or its power supply in unstable conditions, such as a rickety table or a slanted surface. Doing so may result in the unit falling down and causing personal injury and/or property damage.

Replacement of Main Fuse (Side Panel)

Warning!

For continued protection against risk of fire, replace only with fuse of the specified type and current rating.

Battery Replacement

Warning!:

Only certified technician or calibration personnel should replace battery.

Section

5

Calibration

Battery Charge

The potentiometer labeled BAT, located under the calibration cover, is used to set the backup battery trickle charge voltage. This is typically set to 6.9 Vdc with the battery disconnected.

Alarm Parameters

The calibration parameters, SIGMA ALARM and SUM ALARM, can only be changed while in calibration mode. Switch the top dipswitch CAL MODE to the right to switch into calibration mode.

Changing either parameter is done by holding down the parameter key and pressing the up or down arrow buttons. Either parameter can be set in the range of 0.1 to 9999. If a parameter is changed, the instrument will beep to confirm the saving of the parameter, and then return to displaying the current radiation level.

Once parameters are set, it is important to switch the CAL MODE switch back to the left; this protects the parameters from inadvertent changes. Alternatively, in order to preserve the alarm printout (by keeping the CAL MODE switch to the right), simply reattach the calibration cover.

Returning for Repair and Calibration

To return an instrument for repair or calibration, provide sufficient packing material to prevent damage during shipment.

Every returned instrument must be accompanied by an **Instrument Return Form**, which can be downloaded from the Ludlum website at www.ludlums.com. Find the form by clicking the "Support" tab and selecting "Repair and Calibration" from the drop-down menu. Then choose the appropriate Repair and Calibration division where you will find a link to the form.

Section

6

Recycling

Ludlum Measurements, Inc. supports the recycling of the electronic products it produces for the purpose of protecting the environment and to comply with all regional, national, and international agencies that promote economically and environmentally sustainable recycling systems. To this end, Ludlum Measurements, Inc. strives to supply the consumer of its goods with information regarding reuse and recycling of the many different types of materials used in its products. With many different agencies – public and private – involved in this pursuit, it becomes evident that a myriad of methods can be used in the process of recycling. Therefore, Ludlum Measurements, Inc. does not suggest one particular method over another, but simply desires to inform its consumers of the range of recyclable materials present in its products, so that the user will have flexibility in following all local and federal laws.

The following types of recyclable materials are present in Ludlum Measurements, Inc. electronics products, and should be recycled separately. The list is not all-inclusive, nor does it suggest that all materials are present in each piece of equipment:

Batteries	Glass	Aluminum and Stainless Steel
Circuit Boards	Plastics	Liquid Crystal Display (LCD)

Ludlum Measurements, Inc. products, which have been placed on the market after August 13, 2005, have been labeled with a symbol recognized internationally as the "crossed-out wheelie bin." This notifies the consumer that the product is not to be mixed with unsorted municipal waste when discarding. Each material must be separated. The symbol will be placed near the AC receptacle, except for portable equipment where it will be placed on the battery lid.

The symbol appears as such: 

Section 7

Parts List

Model 375P-336, 375P-500, 375P-600, 375P-1000, 375P-2000 & 375P-3500 Radiation Detector Systems

Main Board, Drawing 558 × 503

Reference	Description	Part Number
UNIT	Completely Assembled Model 375P	48-3478
BOARD	Completely Assembled Main Circuit Board	5558-503
CRYSTAL		
Y1	6.144 MHZ	01-5262
CAPACITORS		
C1	1µF, 35V	04-5656
C2	68µF, 10V	04-5654
C3	0.01µF, 50V	04-5664
C4	10µF, 25V	04-5728
C5-C6	27pF, 100V	04-5658
C7-C9	10µF, 25V	04-5728
C10	1µF, 35V	04-5656
C11	0.1µF, 16V	04-5730
C12	68µF, 10V	04-5654
C13	100µF, 16V-T	04-5794
C14-C15	0.01µF, 50V	04-5664
C16	68µF, 10V	04-5654
C17	0.01µF, 50V	04-5664
C18	68µF, 10V	04-5654
C19	1µF, 35V	04-5656
C20	0.01µF, 50V	04-5664
C21-22	10µF, 25V	04-5728
C23	0.01µF, 50V	04-5664
C24	47pF, 100V	04-5660
C25	0.01µF, 50V	04-5664
C26	1µF, 35V	04-5656
C27	10µF, 25V	04-5728

	Reference	Description	Part Number
	C28	68µF, 25V	04-5828
	C29	47pF, 100V	04-5660
	C30	68µF, 25V	04-5828
	C31	0.01µF, 50V	04-5664
	C32	1µF, 35V	04-5656
	C33	6800µF, 35V	04-6079
TRANSISTORS	Q1-Q5	2N7002L	05-5840
	Q6	MJD200 RL	05-5844
	Q7	2N7002L	05-5840
	Q9-Q10	2N7002L	05-5840
VOLTAGE REGULATOR	VR1	LT1129CQ-5	06-6372
INTEGRATED CIRCUITS	U1	SA08-11EWA	07-6389
	U2-U3	KB-2685EW RED	07-6400
	U4	SA08-11EWA	07-6389
	U5	ICM7218CIQI	06-6311
	U6	SA08-11EWA	07-6389
	U7	KB-2785YW YELLOW	07-6371
	U8	KB-2685EW RED	07-6400
	U9	TLC372ID	06-6290
	U10	MAX220CSE	06-6329
	U11	SA08-11EWA	07-6389
	U12	AT89C51RC2	06-6893
	U13	M24C02-WMN6TP	06-6299
	U14	ICL7663SCBA-T	06-6302
	U15	CD74HC4538M	06-6297
	U16	LT1304CS8	06-6394
	Q8	MAX810LEUR	06-6424
DIODES	CR1-CR2	CMSH1-40M	07-6411
	CR3	MMBD914LT1	07-6353
	CR4-CR5	CMSH1-40M	07-6411
	CR6	ZENER 4.7V SMT R	07-6459
	CR7	CMSH1-40M	07-6411
	CR8	ZENER 4.7V SMT R	07-6459
	CR9-CR12	CMSH1-40M	07-6411
LED	DS1	KB-2550SGD GRN RECT	07-6370
SWITCHES	S1-S6	1241.1619	08-6728
	S7	90HBW045	08-6709

	Reference	Description	Part Number
POTENTIOMETER	R26	1M (BAT)	09-6778
RESISTORS	R1	100 Ohm, 1/4W, 1%	12-7840
	R2	60.4 Ohm, 1/4W, 1%	12-7962
	R3	100K, 1/4W, 1%	12-7834
	R4	60.4 Ohm, 1/4W, 1%	12-7962
	R5	100K, 1/4W, 1%	12-7834
	R6	10 Ohm, 1W, 1%	12-7952
	R7	100K, 1/4W, 1%	12-7834
	R8	60.4 Ohm, 1/4W, 1%	12-7962
	R9	2.21K, 1/4W, 1%	12-7835
	R10	22.1K, 1/4W, 1%	12-7843
	R11	68.1K, 1/4W, 1%	12-7881
	R12	10K, 1/4W, 1%	12-7839
	R13	22.1K, 1/4W, 1%	12-7843
	R14	24.3K, 1/4W, 1%	12-7867
	R15	82.5K, 1/4W, 1%	12-7849
	R16	1 Ohm, 1/4W, 5%	12-7205
	R17	1K, 1/4W, 1%	12-7832
	R18	165K, 1/4W, 1%	12-7877
	R19	10K, 1/4W, 1%	12-7839
	R20	1K, 1/4W, 1%	12-7832
	R21	1M, 1/4W, 1%	12-7844
	R22	4.75K, 1/4W, 1%	12-7858
	R23	1M, 1/4W, 1%	12-7844
	R24-R25	50 Ohm, 5W	12-7515
	R27	2.21K, 1/4W, 1%	12-7835
	R28	12K, 1/10 W, 1%	12-7164
	R29	100K, 1/4W, 1%	12-7834
	R30-R31	50 Ohm, 5W	12-7515
	R32-R33	100K, 1/4W, 1%	12-7834
	R34	1.5K, 1/4W, 1%	12-7878
	R35	10K, 1/4W, 1%	12-7839
	R36	2.21K, 1/4W, 1%	12-7835
	R40	1 Ohm, 1/4W, 5%	12-7205
RESISTOR NETWORK	RN1	220K	12-7831
CONNECTORS	P1-P2	640457-3, MTA100×3RA	13-8165
	P3	640457-2, MTA100×2RA	13-8147
	P4	1-640457-3, MTA100×13RA	13-8113
	P5-P6	640457-2, MTA100×2RA	13-8147

	Reference	Description	Part Number
INDUCTORS	L1	220µH	21-9678
	L2-L3	470µH, TKS1245	21-9699
	L4	22µH, CD43-220 SM	21-9208
RELAY	RL1	JS1-5V, AROMAT	22-9893
Detector Interface Board, Drawing 215 × 347	BOARD	Completely Assembled Detector Interface Board	5215-347
CAPACITORS	C1	10µF, 25V	04-5655
	C2	4.7µF, 25V	04-5653
	C3	0.001µF, 100V	04-5659
	C4	10µF, 25V	04-5655
	C5	47uF, 10V	04-5666
	C6	0.001µF, 10V	04-5659
	C7	0.01µF, 50V	04-5664
	C8	1µF, 35V	04-5656
	C9-C10	0.01µF, 50V	04-5664
	C11	0.001µF, 2kV	04-5703
	C12	10 pF, 100V	04-5673
	C13	0.01µF, 50V	04-5664
	C14	0.01µF, 2KV	04-5722
	C15	47 pF, 100V	04-5660
	C16	10µF, 25V	04-5655
	C17	0.01µF, 2kV	04-5722
	C18-C22	0.001µF, 2kV	04-5703
	C23-C27	0.01µF, 500V	04-5696
DIODES	CR1	CMSH1-40M	07-6411
	CR2-CR8	CMPD2004S	07-6402
TRANSISTOR	Q1	MTD2N50E	05-5855
POTENTIOMETER	R18	1 M, 3269W1-105, HV ADJUST	09-6911
RESISTORS	R1-R4	150 Ohm, 1/2W, 5%	12-7965
	R5-R6	47.5 Ohm, 1/8W, 1%	12-7966
	R7	100K, 1/8W, 1%	12-7834
	R8	1.82K, 1/8W, 1%	12-7030
	R9	10K, 1/8W, 1%	12-7839

	Reference	Description	Part Number
	R10	4.75K, 1/8W, 1%	12-7858
	R11	100 Ohm, 1/8W, 1%	12-7840
	R12	1K, 1/8W, 1%	12-7832
	R13-R15	10K, 1/8W, 1%	12-7839
	R16	4.75K, 1/8W, 1%	12-7858
	R17	392K, 1/8W, 1%	12-7841
	R19-R20	1M, 1/8W, 1%	12-7844
	R21	1 GIG-Ohm FHV-1, 2%	12-7686
	R23	1M, 1/8W, 1%	12-7844
INTEGRATED CIRCUITS	U1	ICL7667CBA	06-6510
	U2	MAX985EUK-T	06-6459
	U3	CA3096M	06-6288
	U4	MAX641ACSA-T	06-6388
VOLTAGE REGULATORS	VR1	LT1460KCS3-2.5TR	05-5867
	VR2	LM78L05ACM	05-5864
INDUCTORS	L1-L2	470uH	21-9224
CONNECTORS	P20	640456-2 MTA100x2	13-8073
	P34	640456-2 MTA-100x2	13-8073
	W1	COAXIAL CONNECTOR, SIGNAL X	21-9463

Wiring Diagram, Drawing 396 × 726

AUDIO	DS1	MC-V09-530-S	21-9730
CONNECTORS	J1	CONN-1-640441-2	13-8431
	J2	FILTER CORCOM-3EHG1-2	21-9830
	J3	D RECPT-RD9F000V3 9PIN	13-8003
	J5	CONN-640457-3	13-8165
	J17	CONN-640441-2	13-8196
	J20	CONN-640441-2	13-8196
SWITCH	S1	DM62J12S205PQ W/LEGEND	08-6715
BATTERY	B1	BATTERY-PS630	21-9705
TRANSFORMER	T1	CFP302 115/230V	22-9908

	Reference	Description	Part Number
System Miscellaneous			
	1 EA	10 µCi ^{137}Cs Check Source	01-5231
	1 EA	Adapter BNC/BNC MILESTEK	13-8481
	1 EA	Power Cord – BELDEN 7.5 feet LONG	21-9394
Other 375P Models			
Model 375P-336	2 EA	Model 44-151 Plastic Detectors	47-3347
	2 EA	CBL-BNC CRIMP 200 feet, RG58	8303-668
Model 375P-336-1	2 EA	Model 44-151-1 Plastic Detectors	47-3275
	2 EA	CBL-BNC PGTL 200 feet, RG58	8303-754
Model 375P-336-2	2 EA	Model 44-151-2 Detectors with PVC Housing	47-3662
	2 EA	CBL-C 300 feet, RG58	40-1004-300
Model 375P-500	1 EA	Model 44-128-1 Plastic Detector	47-3319
	1 EA	CBL-BNC CRIMP 200 feet, RG58	8303-668
Model 375P-600	1 EA	Model 44-139 Plastic Detector	47-3149
Model 375P-600-1	1 EA	Model 44-128-9-1 Plastic Detector	47-3931-1
	1 EA	CBL-BNC CRIMP 200 feet, RG58	8303-668
Model 375P-1000	2 EA	Model 44-128-1 Plastic Detectors	47-3319
	2 EA	CBL-BNC CRIMP 200 feet, RG58	8303-668
Model 375P-2000	4 EA	Model 44-128-1 Plastic Detectors	47-3319
	4 EA	CBL-BNC CRIMP 200 feet, RG58	8303-668
Model 375P-3500	2 EA	Model 44-173-1 Plastic Detectors	47-3707
	2 EA	CBL-BNC CRIMP 200 feet, RG58	8303-668
1 1/8 in. Voltage Divider, Drawing 435 × 435	BOARD	Completely Assembled Circuit Board (×2)	5435-182
CAPACITORS	C1-C3	0.01µF, 200V	04-5725
	C4	0.0047µF, 3KV	04-5547
RESISTORS	R1	10M, 1/8W, 1%	12-7996
	R2	7.5M, 1/8W, 5%	12-7971
	R3-R10	10M, 1/8W, 1%	12-7996

	R11	2.21M, 1/4W, 1%	12-7002
	R12-R13	6.04M, 1/4W, 1%	12-7071
MISCELLANEOUS	W1	TEFLON WHITE EE22 6 in. HV	21-9759
	W4	#22 BLACK UL1430 GND 6 in.	21-9154

Detector Electronics

1.125 in. Voltage Divider, Drawing 2 × 191	BOARD	Completely Assembled Circuit Board (×2)	5002-241
CAPACITOR	C2	0.01µF, 2KV	04-5525
RESISTORS	R1	1Meg, 1/3W, 1%	12-7609
	R2-R12	10M, 1/3W, 1%	12-7749

Section

8

Drawings

Circuit Booards

Main Circuit Board, Drawing 558 x 503 (4 sheets)

Main Circuit Board Component Layout, Drawing 558 x 504 (2 sheets)

Detector Interface Board, Drawing 215 × 347

Detector Interface Board Component Layout, Drawing 215 × 348A

Voltage Divider Boards

1 1/8 in. Voltage Divider, Drawing 435 × 435

1 1/8 in. Voltage Divider Component Layout (Top side), Drawing 435 × 436A

1.125 in. Voltage Divider Component Layout (Bottom side), Drawing 435 × 436A

1.125 inch Voltage Divider, Drawing 2 × 191

Wiring Diagram, Drawing 396 × 726

Installation and Detector Drawings

Model 375P-336 Installation, Drawing 396 × 864 – 864C

Model 44-151 Detector (for 375P-336) Dimensions, 215 x 415

Model 44-151-1 Detector (for 375P-336-1) Dimensions, 396 x 247

Model 44-151-2 Detector (for 375P-336-2) Dimensions, 215 x 651

Model 375P-500 Conveyor Installation, Drawing 384 x 1193

Model 375P-600-1 Conveyor Installation, Drawing 384 x 1194

Model 375P-1000 Installation, Drawings 396 × 272A – 272D

Model 44-128-1 Detector (for 375P-1000), Drawing 385 x 471

Model 375P-2000 Installation, Drawings 396 x 1180 – 1180E

Model 375P-3500 Conveyor Installation, Drawing 396 × 957

Miscellaneous

Anchor Bolt and Concrete Template, Drawing 511 x 836

Wall Mounting Guide, Drawing 396 x 166

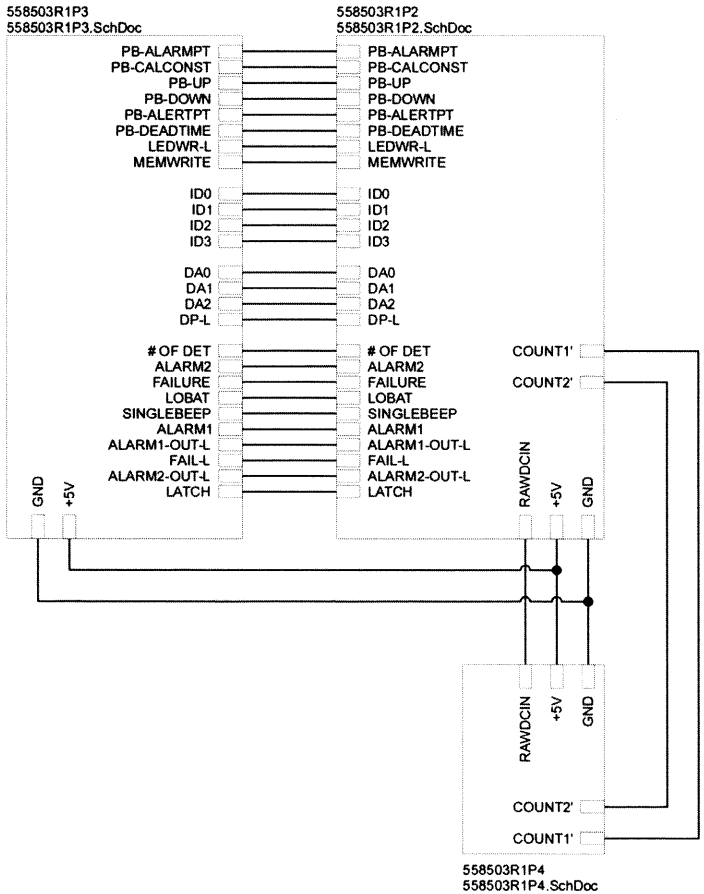

PCBFID1 PCBFID2 PCBFID3

FID_LOCAL FID_LOCAL FID_LOCAL

LUDLUM MEASUREMENTS, INC.		PO Box 810 501 Oak Street Sweetwater, Texas 79556 U.S.A. 1-800-622-0828	
Drawn: PAB	8/17/2021	Title: MAIN BOARD 2021	
Design: RSS	8/17/2021	Model: 375P	
		Board#: 5558-503	
Approve:		Sheet: 1 of 4	Series / Sheet
Print Date: 11/22/2021 9:24:05 AM		Rev: 1	558 / 503
W:\Projects\LMIM 375P\5558-503\Rev1\558503R1P1.SchDoc			

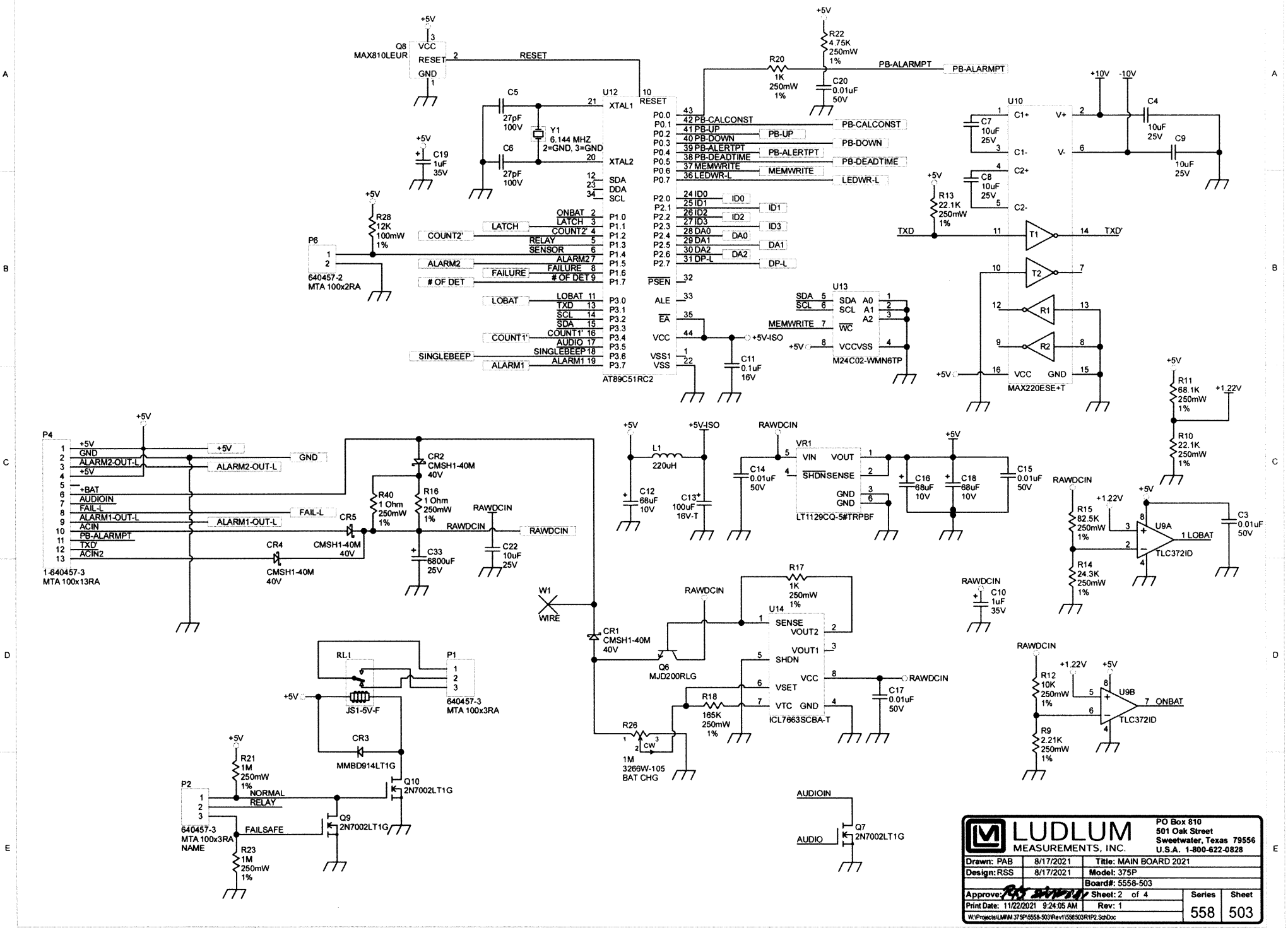
Q8
MAX810LEUR
VCC
RESET
GND
RESET
U12
AT89C51RC2
XTAL1
XTAL2
SDA
DDA
SCL
P0.0 PB-CALCONST
P0.1 PB-UP
P0.2 PB-DOWN
P0.3 PB-ALERTPT
P0.4 PB-DEADTIME
P0.5 MEMWRITE
P0.6 LEDWR-L
P0.7
P2.0 ID0
P2.1 ID1
P2.2 ID2
P2.3 ID3
P2.4 DA0
P2.5 DA1
P2.6 DA2
P2.7 DP-L
PSEN
ALE
EA
VCC
VSS1
VSS
ONBAT
LATCH
COUNT2'
RELAY
SENSOR
ALARM2
FAILURE
OF DET
LOBAT
TXD
COUNT1'
AUDIO
SINGLEBEEP
ALARM1
Y1
6.144 MHZ
2=GND, 3=GND
C5 27pF 100V
C6 27pF 100V
C19 1uF 35V
R28 12K 100mW 1%
P6
640457-2
MTA 100x2RA
R22 4.75K 250mW 1%
R20 1K 250mW 1%
C20 0.01uF 50V
PB-ALARMPT
U10
MAX220ESE+T
C1+
C1-
C2+
C2-
V+
V-
VCC
GND
C7 10uF 25V
C8 10uF 25V
C4 10uF 25V
C9 10uF 25V
+10V
-10V
R13 22.1K 250mW 1%
T1
T2
R1
R2
TXD'
U13
M24C02-WMN6TP
SDA
SCL
A0
A1
A2
WC
VCCVSS
MEMWRITE
+5V-ISO
C11 0.1uF 16V
P4
1-640457-3
MTA 100x13RA
+5V
GND
ALARM2-OUT-L
+BAT
AUDIOIN
FAIL-L
ALARM1-OUT-L
ACIN
PB-ALARMPT
TXD'
ACIN2
CR2 CMSH1-40M 40V
R40 1 Ohm 250mW 1%
R16 1 Ohm 250mW 1%
CR5 CMSH1-40M 40V
CR4 CMSH1-40M 40V
C33 6800uF 25V
RAWDCIN
C22 10uF 25V
W1
WIRE
CR1 CMSH1-40M 40V
L1 220uH
C12 68uF 10V
C13 100uF 16V-T
VR1
LT1129CQ-5#TRPBF
VIN
VOUT
SHDN
SENSE
GND
C14 0.01uF 50V
C16 68uF 10V
C18 68uF 10V
C15 0.01uF 50V
R11 68.1K 250mW 1%
R10 22.1K 250mW 1%
+1.22V
R15 82.5K 250mW 1%
R14 24.3K 250mW 1%
U9A
TLC372ID
1 LOBAT
C3 0.01uF 50V
C10 1uF 35V
U14
ICL7663SCBA-T
SENSE
VOUT2
VOUT1
SHDN
VCC
VSET
VTC
GND
R17 1K 250mW 1%
R18 165K 250mW 1%
C17 0.01uF 50V
Q6
MJD200RLG
R26
1M
3266W-105
BAT CHG
CW
U9B
R12 10K 250mW 1%
R9 2.21K 250mW 1%
7 ONBAT
RL1
JS1-5V-F
CR3
MMBD914LT1G
P1
640457-3
MTA 100x3RA
P2
640457-3
MTA 100x3RA
NAME
NORMAL
RELAY
FAILSAFE
R21 1M 250mW 1%
R23 1M 250mW 1%
Q9 2N7002LT1G
Q10 2N7002LT1G
AUDIOIN
AUDIO
Q7 2N7002LT1G
LUDLUM MEASUREMENTS, INC.
PO Box 810
501 Oak Street
Sweetwater, Texas 79556
U.S.A. 1-800-622-0828
Drawn: PAB 8/17/2021
Design: RSS 8/17/2021
Title: MAIN BOARD 2021
Model: 375P
Board#: 5558-503
Approve:
Sheet: 2 of 4
Print Date: 11/22/2021 9:24:05 AM
Rev: 1
W:\Projects\LMM 375P\5558-503\Rev1\5558503R1P2.SchDoc
Series 558
Sheet 503

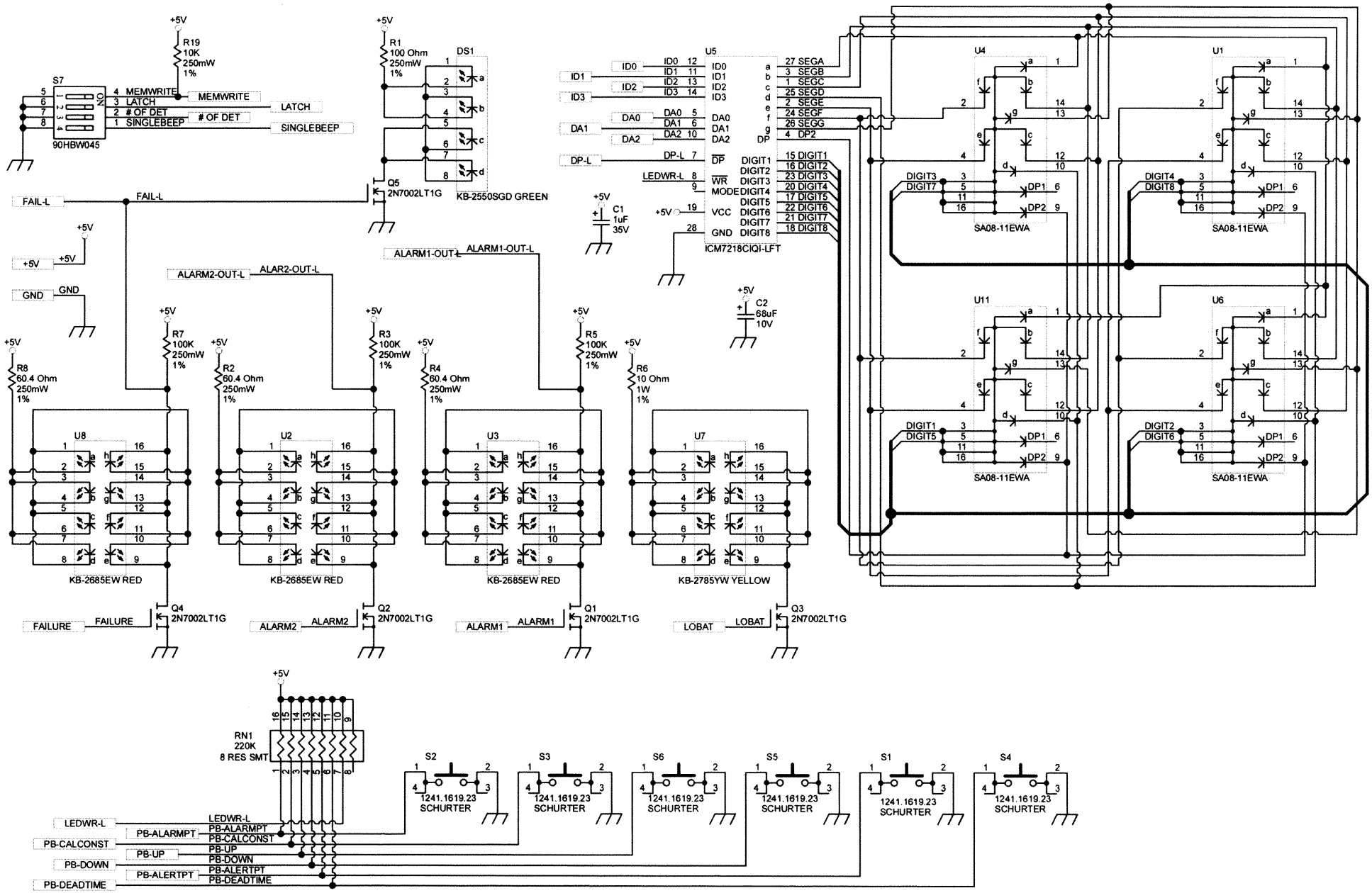

LUDLUM MEASUREMENTS, INC.

PO Box 810
501 Oak Street
Sweetwater, Texas 79556
U.S.A. 1-800-622-0828

Drawn: PAB	8/17/2021	Title: MAIN BOARD 2021	
Design: RSS	8/17/2021	Model: 375P	
Approve:		Board#: 5558-503	
Print Date: 11/22/2021 9:24:06 AM		Sheet: 3 of 4	Series 558 / Sheet 503
W:\Projects\LMNM 375P\5558-503\Rev1\558503R1P3.SchDoc		Rev: 1	

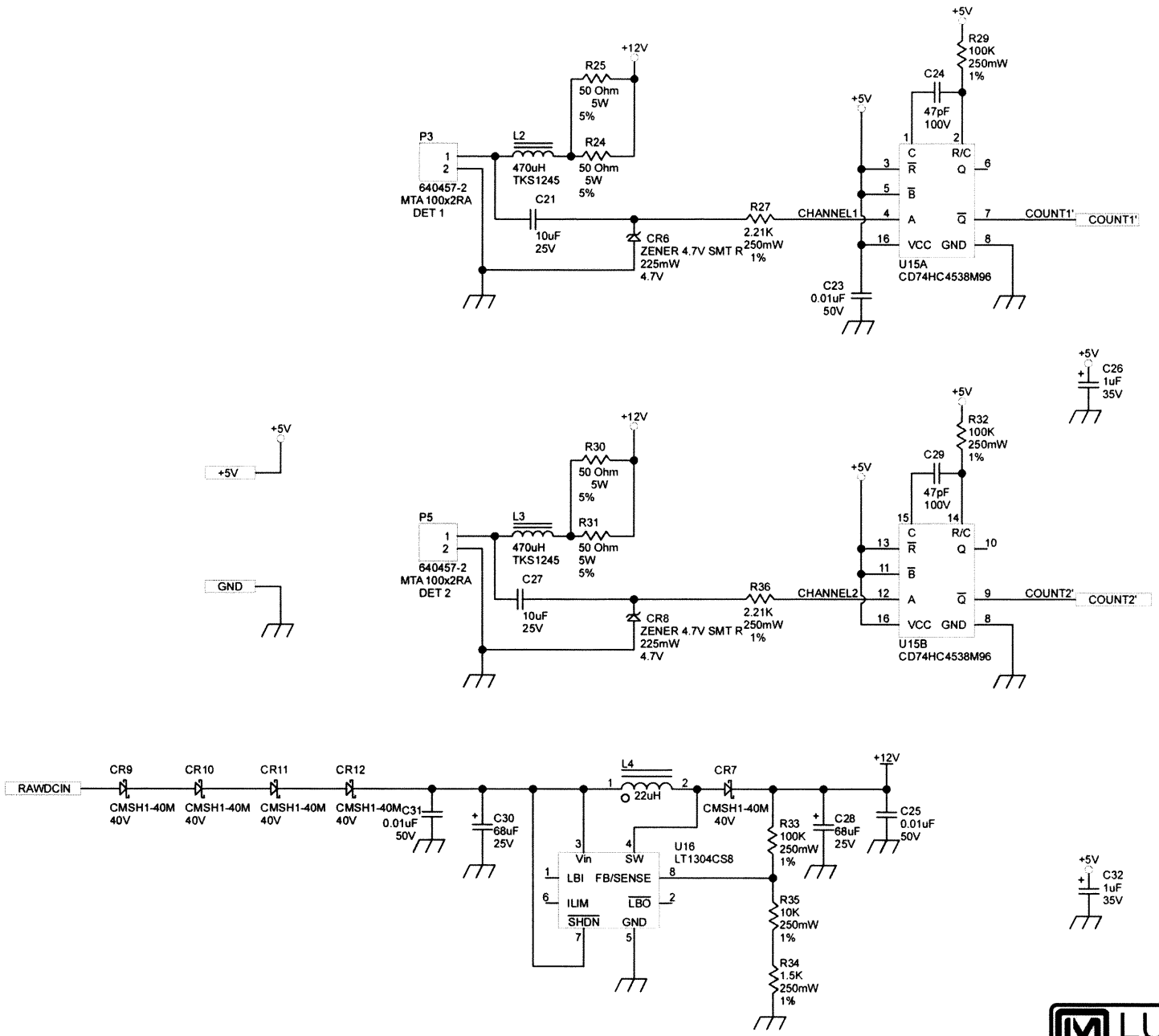

LUDLUM MEASUREMENTS, INC.

PO Box 810
501 Oak Street
Sweetwater, Texas 79556
U.S.A. 1-800-622-0828

Drawn: PAB	8/17/2021	Title: MAIN BOARD 2021		
Design: RSS	8/17/2021	Model: 375P		
		Board#: 5558-503		
Approved:		Sheet: 4 of 4	Series	Sheet
Print Date: 11/22/2021 9:24:06 AM		Rev: 1	558	503
W:\Projects\LMIM 375P\5558-503\Rev1\558503R1P4.SchDoc				

TopLayer (Scale 1:1)

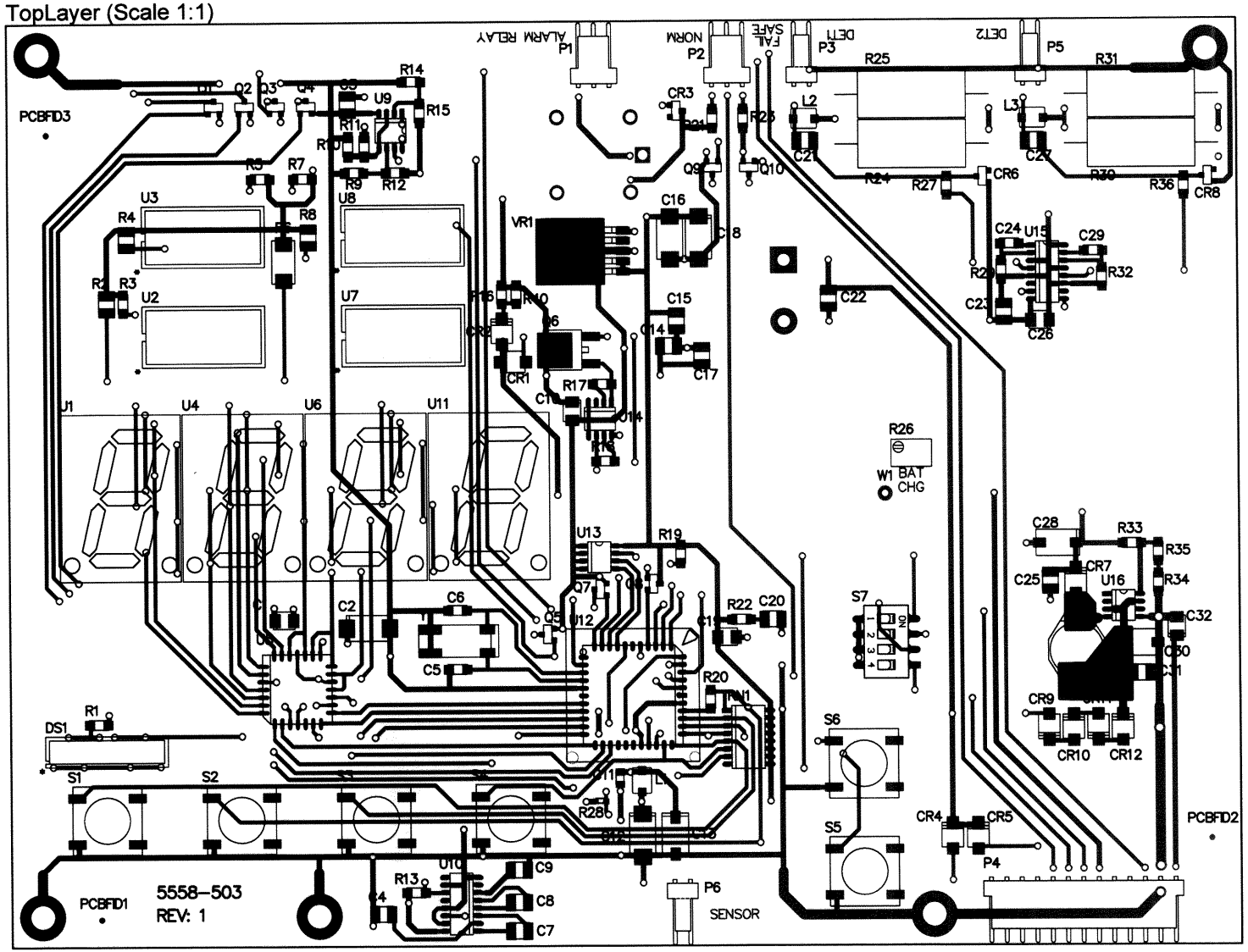

LUDLUM MEASUREMENTS				
Part: 5558-503	**Model:** 375P			
Desc: MAIN BOARD 2021			**Rev:**	1
Design: RSS	**Date:** 8/17/2021		**SERIES**	**SHEET**
Drawn: PAB	**Date:** 8/17/2021	**SHEET**	558	504
Apr: TJS	**Date:** 22 Nov 21	1 of 4		

BottomLayer (Scale 1:1)

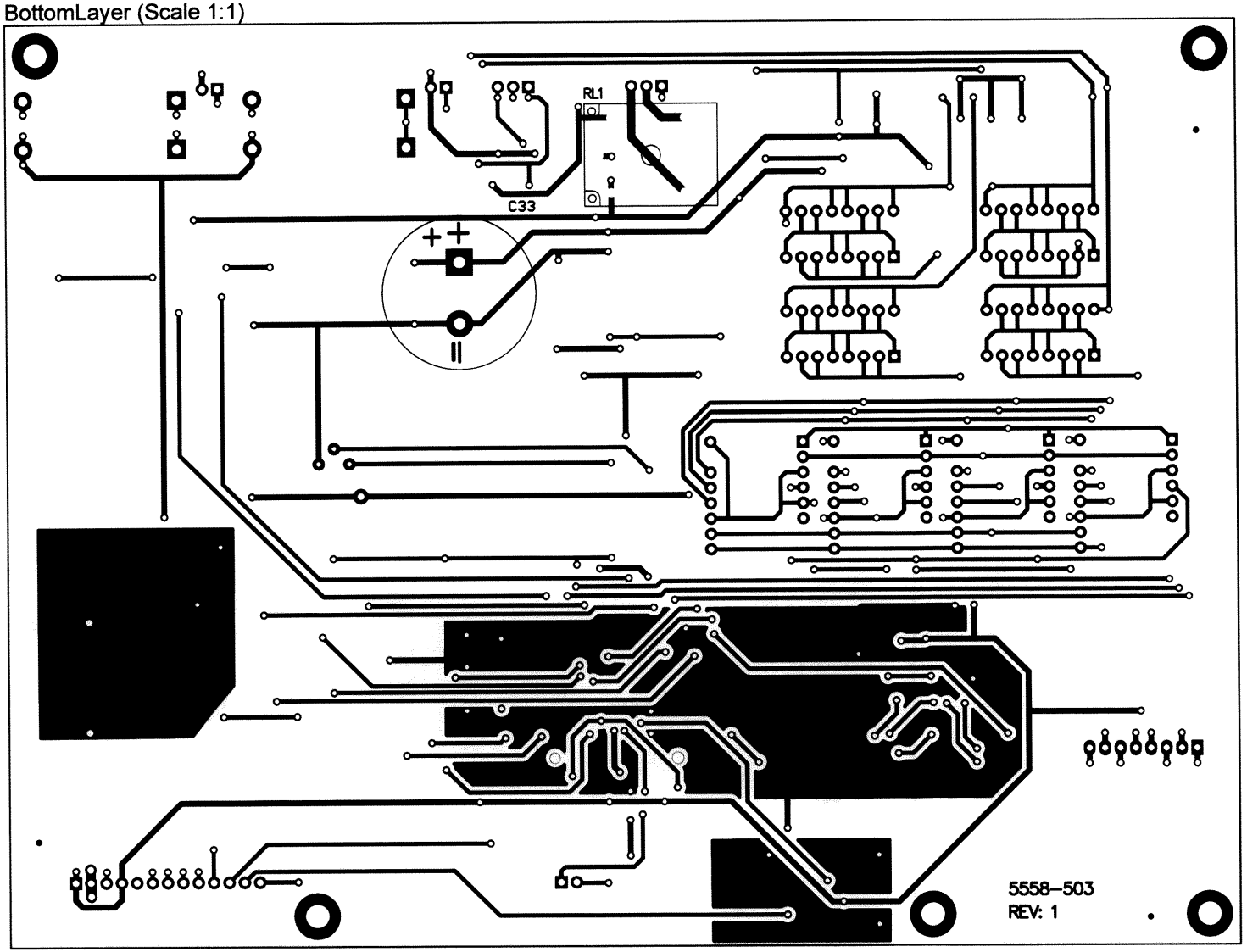

LUDLUM MEASUREMENTS				
Part: 5558-503	Model: 375P			
Desc: MAIN BOARD 2021			Rev:	1
Design: RSS	Date: 8/17/2021		SERIES	SHEET
Drawn: PAB	Date: 8/17/2021	SHEET	558	504
Apr: RJS	Date: 22/Nov/22	2 of 4		

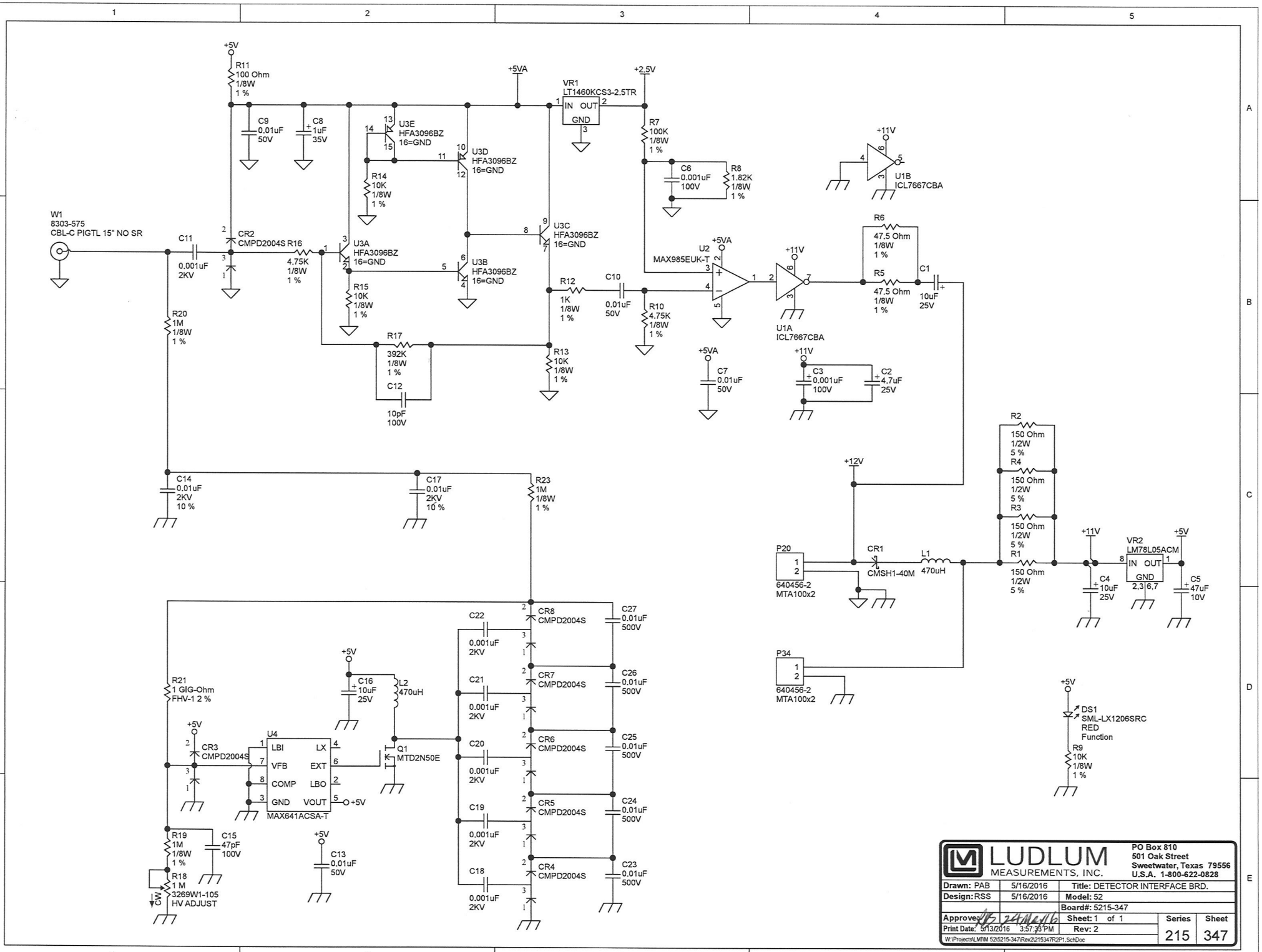

LUDLUM MEASUREMENTS, INC.

PO Box 810
501 Oak Street
Sweetwater, Texas 79556
U.S.A. 1-800-622-0828

Drawn: PAB	5/16/2016	Title: DETECTOR INTERFACE BRD.		
Design: RSS	5/16/2016	Model: 52		
		Board#: 5215-347		
Approved: JB 24 May 16		Sheet: 1 of 1	Series	Sheet
Print Date: 5/13/2016 3:57:33 PM		Rev: 2	215	347

W:\Projects\LMIM 52\5215-347\Rev2\215347R2P1.SchDoc

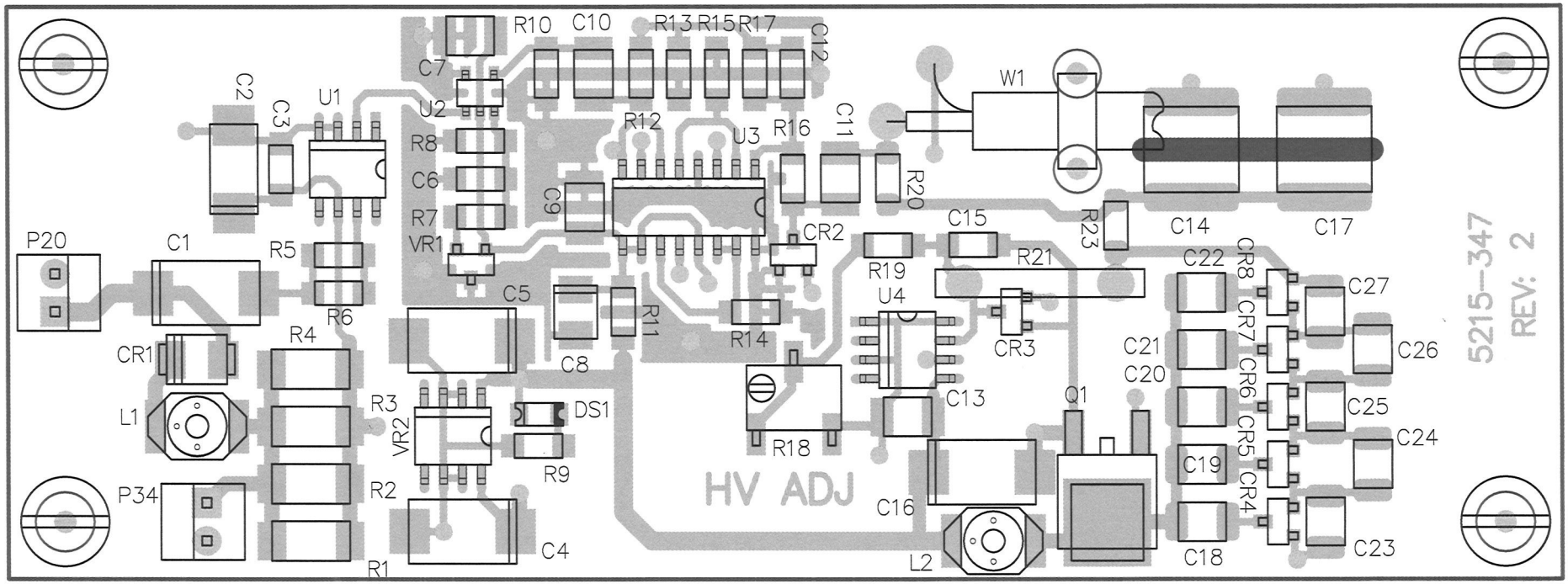

LUDLUM MEASUREMENTS, INC.	PO Box 810 501 Oak Street Sweetwater, TX 79556 U.S.A. 1-800-622-0828		
Title: DETECTOR INTERFACE BRD.			
Drawn: PAB	5/16/2016	**Model:** 52	
Design: RSS	5/16/2016	**Board#:** 5215-347	
Approve:		**Rev:** 2	
Print Date: 5/13/2016 4:06:11 PM		**SCALE: 1.08** Top Overlay	**Series** 215 / **Sheet** 348 A
W:\Projects\LMI\M 52\5215-347\Rev2\215347R2_Assy.PcbDoc			

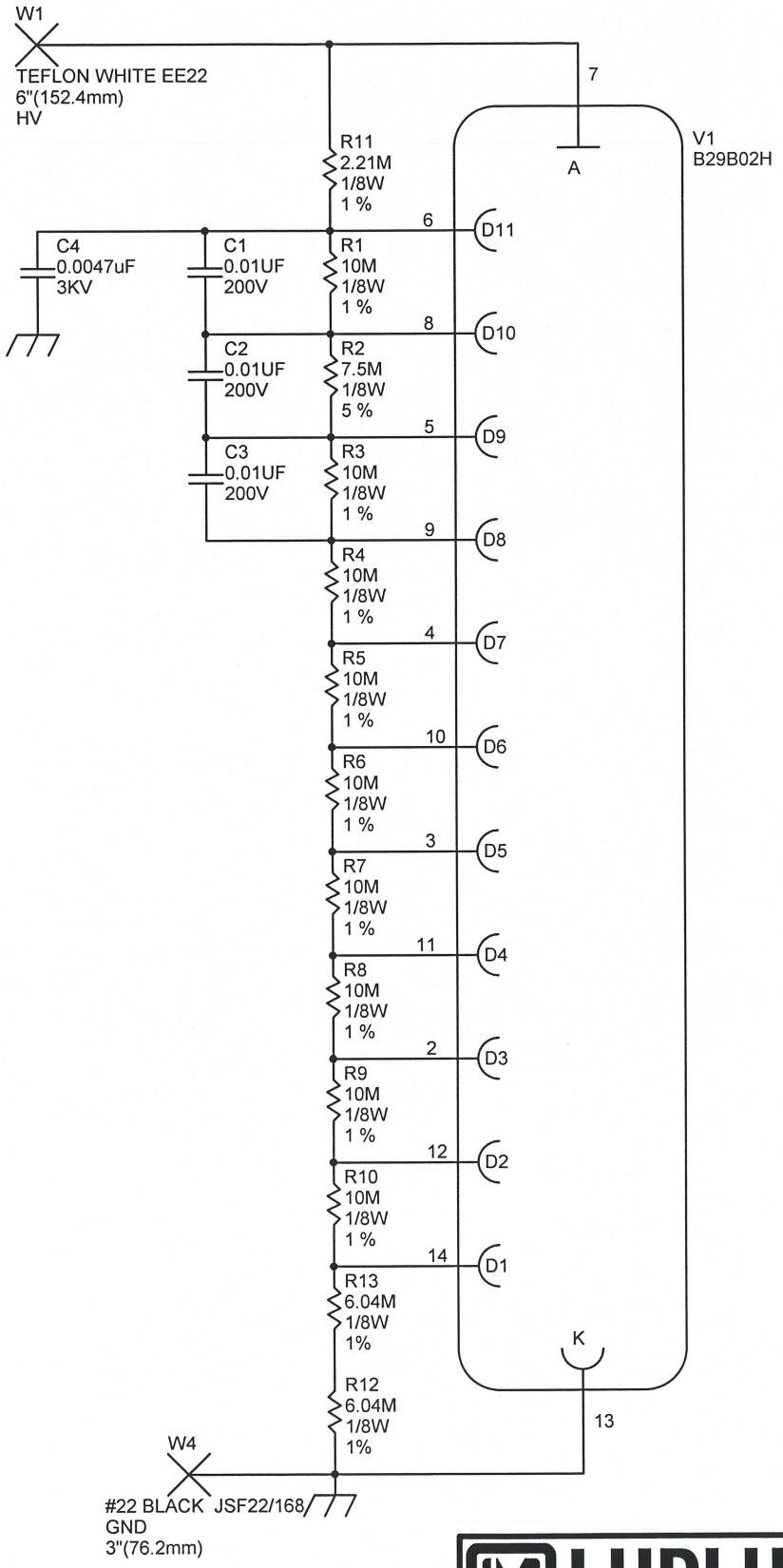

LUDLUM MEASUREMENTS, INC.

PO Box 810
501 Oak Street
Sweetwater, Texas 79556
U.S.A. 1-800-622-0828

Drawn: KKH	08-Jan-03	Title: 1 1/8" Voltage Divider		
Design: RSS	08-Jan-03	Model: M53 / M4500		
		Board#: 5435-182		
Approve: RSS	22-Oct-10	Sheet: 1 of 1	Series 435	Sheet 435
10:33:24	22-Oct-2010	Rev: 1.0		
435x435				

V1
B29B02H

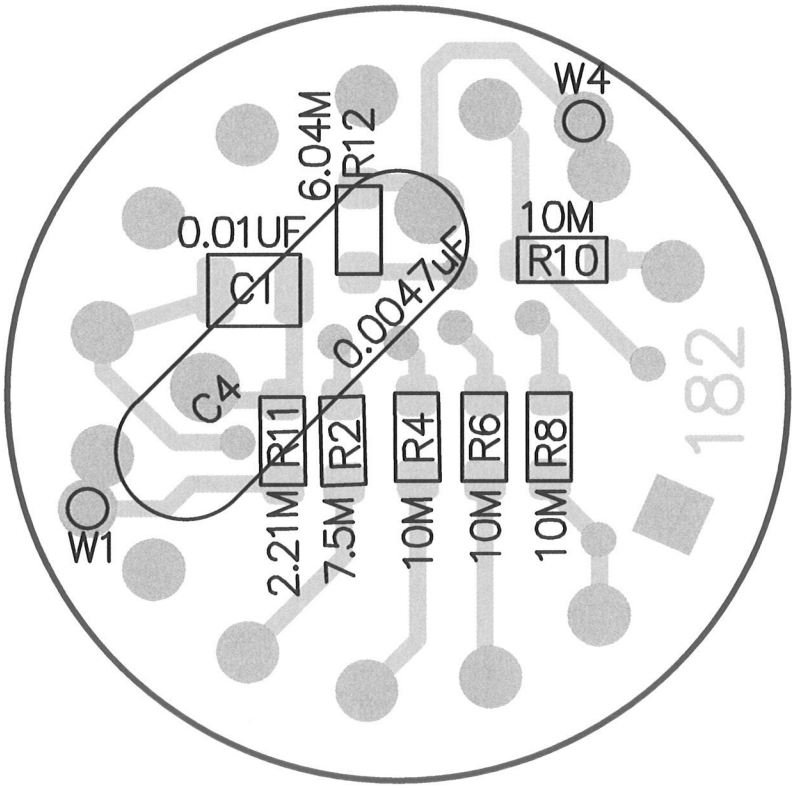

LUDLUM MEASUREMENTS, INC.		PO Box 810 501 Oak Street Sweetwater, TX 79556 U.S.A. 1-800-622-0828		
Title: 1 1/8" VOLTAGE DIVIDER				
Drawn: PAB	1/27/2014	**Model:** B29B10H		
Design: LL	3/24/2003	**Board#:** 5435-182		
Approve: RB	20 Mar 14	**Rev:** 2		
PCBA Drawing		**SCALE: 6.97**	**Series**	**Sheet**
Print Date: 1/28/2014 9:35:12 AM		Top Overlay	435	436A
W:\Projects\LMI\VoltageDividers\5435-182\Rev2\435182R2_Assy.PcbDoc				

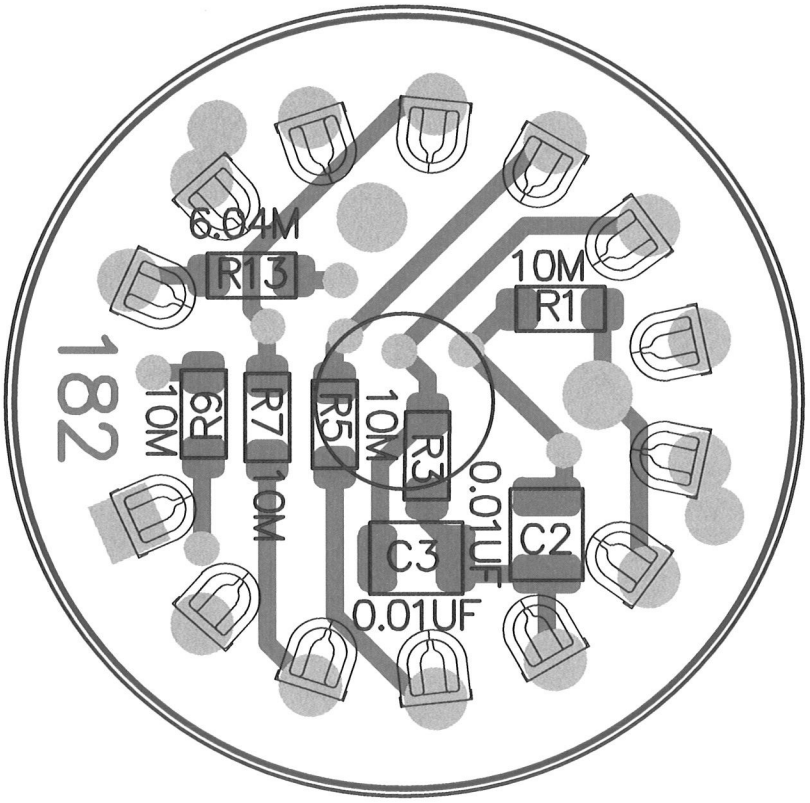

LUDLUM MEASUREMENTS, INC.
PO Box 810
501 Oak Street
Sweetwater, TX 79556
U.S.A. 1-800-622-0828

Title: 1 1/8" VOLTAGE DIVIDER				
Drawn: PAB	1/27/2014	**Model:** B29B10H		
Design: LL	3/24/2003	**Board#:** 5435-182		
Approve: RBS	2.8.04	**Rev:** 2		
PCBA Drawing		**SCALE: 6.97**	**Series**	**Sheet**
Print Date: 1/28/2014 9:35:13 AM		Bottom Overlay	435	436A

W:\Projects\LMI\VoltageDividers\5435-182\Rev2\435182R2_Assy.PcbDoc

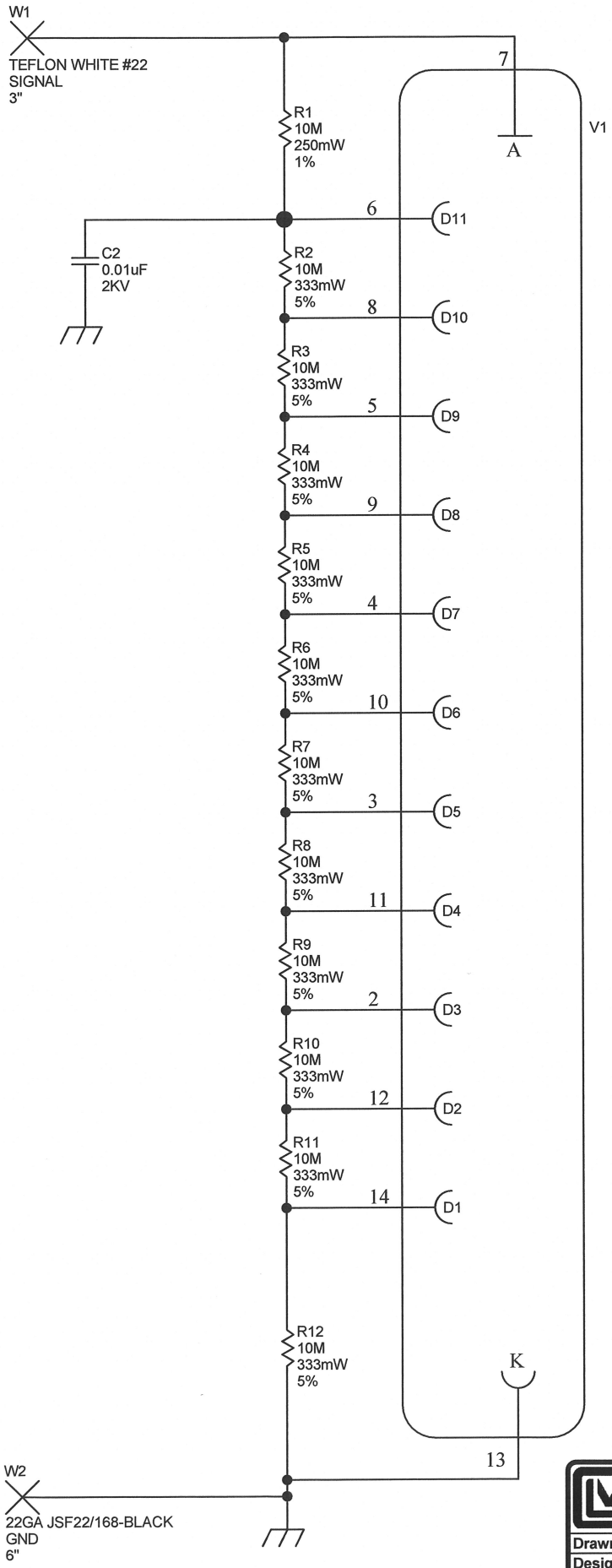

LUDLUM MEASUREMENTS, INC.

PO Box 810
501 Oak Street
Sweetwater, Texas 79556
U.S.A. 1-800-622-0828

Drawn: CKB	06/29/1998	Title: VOLTAGE DIVIDER		
Design: DL	06/29/1998	Model: 1.125"		
		Board#: 5002-241		
Approve: RDB 12 Nov 12		Sheet: 1 of 1	Series	Sheet
Print Date: 11/12/2012 1:05:09 PM		Rev: 1	002	191

W:\Projects\LMI\VoltageDividers\5002-241\Rev1\002241R1P1.SchDoc

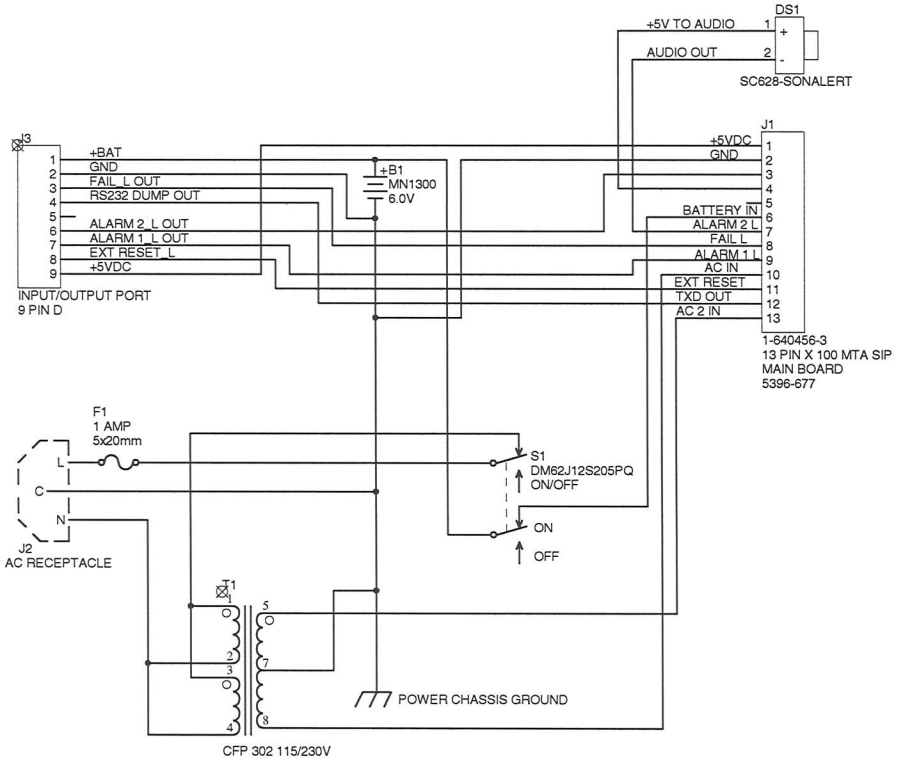

4-20 mA ISOLATED OUT

J3
INPUT/OUTPUT PORT
9 PIN D

1 — +BAT
2 — GND
3 — FAIL_L OUT
4 — RS232 DUMP OUT
5 — 4-20mA SOURCE
6 — 4-20mA RETURN (ISOLATED)
7 — ALARM_L OUT
8 — EXT RESET_L
9 — +5VDC

MAINS RELAY (3 PIN CONNECTOR ADDED)
4396-202

J5
3 PIN CONNECTOR

1 — HOT 120VAC ON HIGH ALARM
2 — NEUTRAL
3 — EARTH GROUND

220 VAC OPERATION

TO CONVERT FROM 110 VAC OPERATION TO 220 VAC:
DISCONNECT WIRES GOING TO PINS 2 &3
INSULATE THE WIRES WITH SHRINK OR TAPE,
AND SHORT PINS 2 & 3 TOGETHER

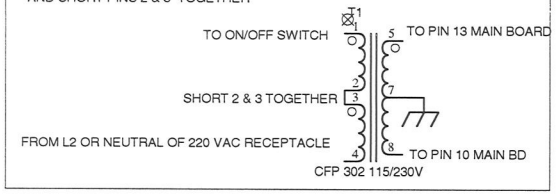

J17
1 — +12VDC
2
TO DETECTOR 1

J20
1 — +12VDC
2
TO DETECTOR 2

LUDLUM MEASUREMENTS, INC.
PO Box 810
501 Oak Street
Sweetwater, Texas 79556
U.S.A. 1-800-622-0828

Drawn: SA	02/07/05	Title: WIRING DIAGRAM	
Design: RDS	02/07/05	Model: 375P	
Check:		Board#: 396-726	
Approved:		Sheet: 1 of 1	Series 396 / Sheet 726
13:44:25	13-Jun-2006	Rev: 1.0	

396X726

REVISION HISTORY			
REV	DESCRIPTION	DATE	BY
1	VALID	6/1/2006	JSM
2	UPDATED TO NEW STYLE DETECTOR	7/8/2021	CMC

NOTE: ELECTRONICS CAN BE MOUNTED UP TO 1000 FT/304.8 M AWAY

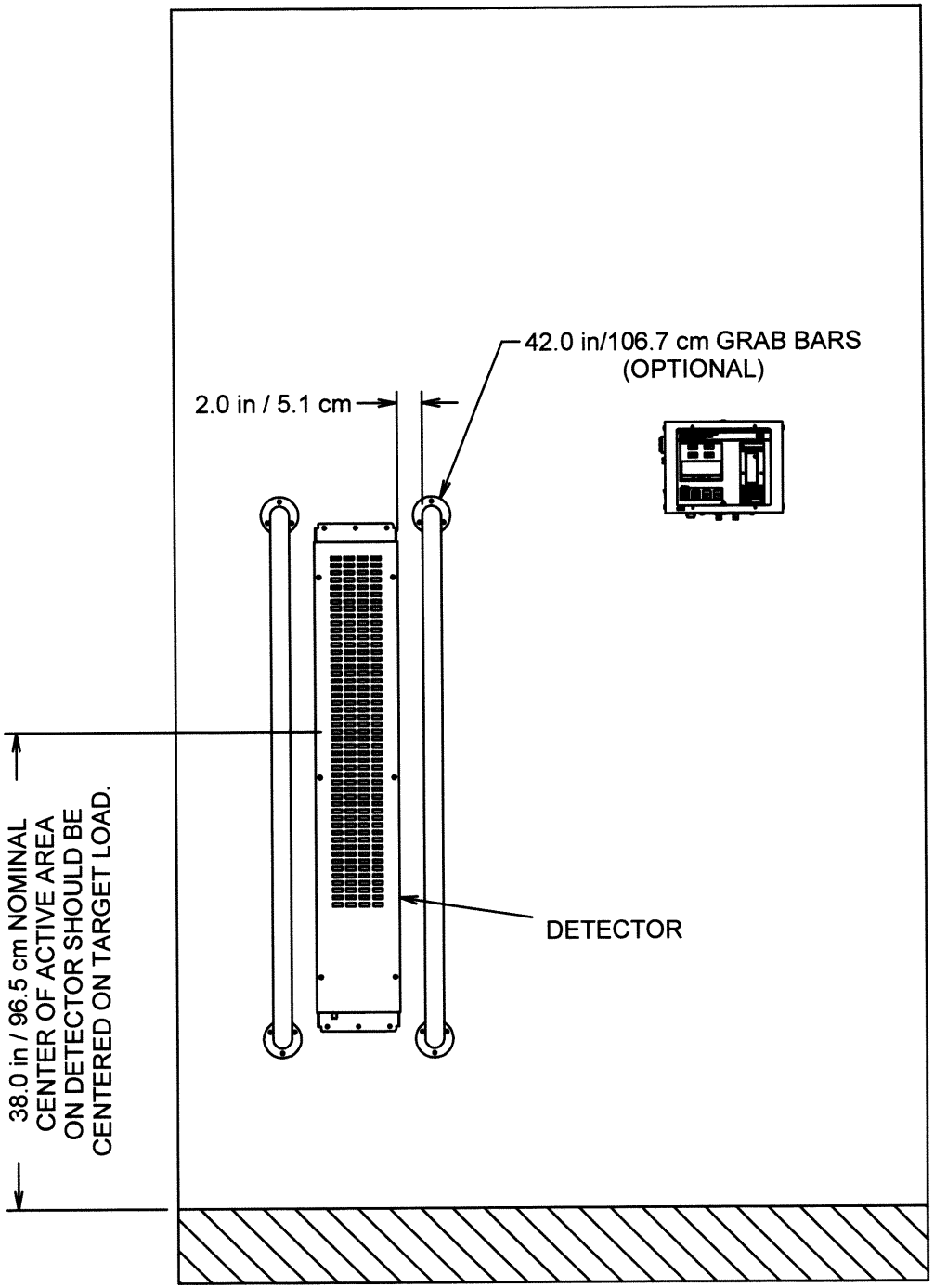

MAX RECOMMENDED DISTANCE BETWEEN DETECTORS = 12O in/304.8 cm. THEY CAN BE SPACED FARTHER APART, BUT SENSITIVITY GOES DOWN AS DISTANCE INCREASES.

DWN	DATE	CHK	DATE	APP	DATE
CMC	7-8-21			JGW	7-8-21

DWG NUM: 4396-864 SCALE: FULL ☐ OTHER

TITLE M 375P-336 INSTALLATION

LUDLUM MEASUREMENTS, INC.
501 OAK STREET
SWEETWATER, TEXAS 79556

SERIES 396 SHEET 864

REVISION HISTORY			
REV	DESCRIPTION	DATE	BY
1	VALID	6/1/2006	JSM
2	UPDATED TO NEW STYLE DETECTOR	7/8/2021	CMC

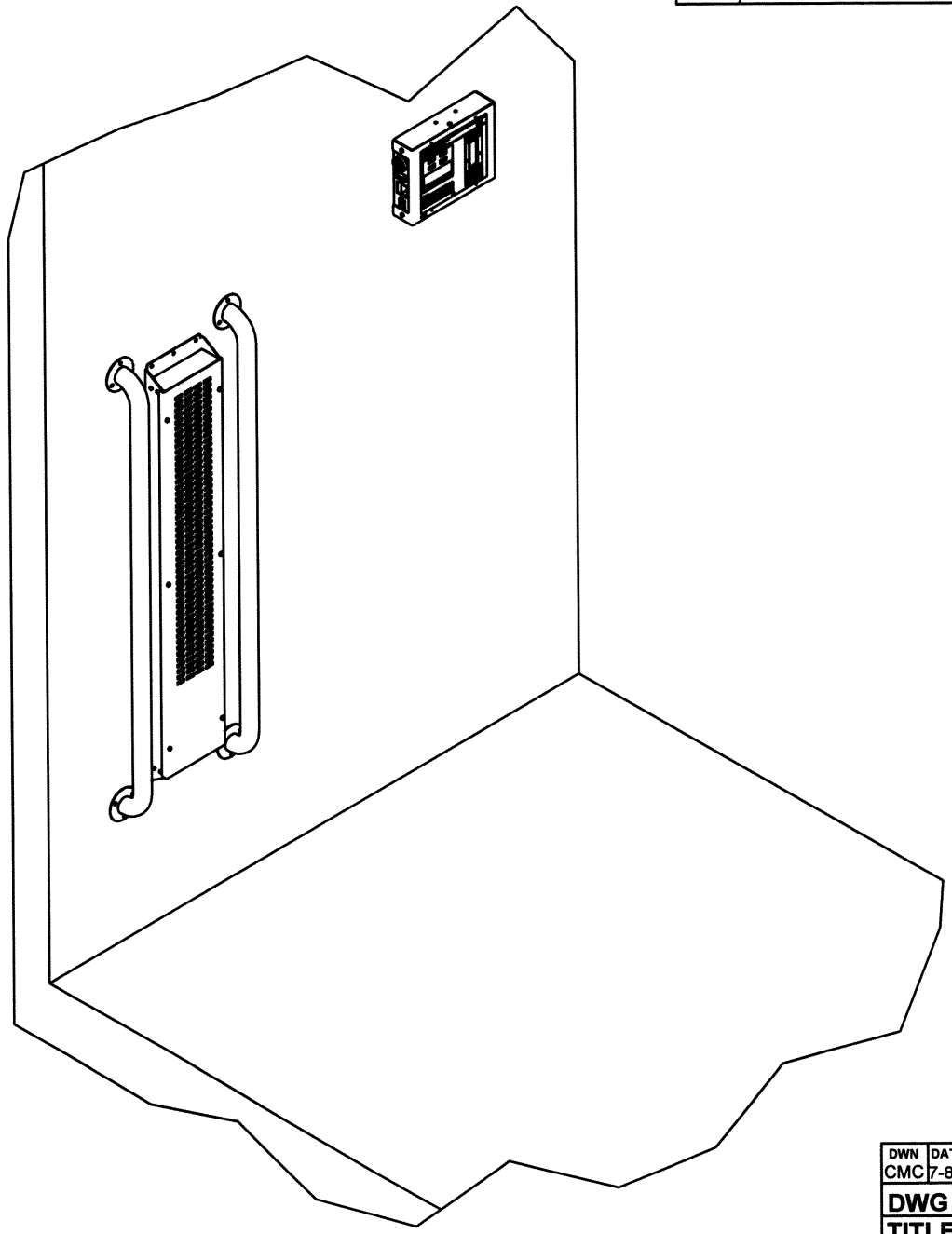

DWN	DATE	CHK	DATE	APP	DATE
CMC	7-8-21			JGW	7-8-21

DWG NUM: 4396-864A

SCALE: FULL ☐ OTHER

TITLE 375P-336 INST. ISO VIEW

LUDLUM MEASUREMENTS, INC.
501 OAK STREET
SWEETWATER, TEXAS 79556

SERIES 396

SHEET 864A

REVISION HISTORY			
REV	DESCRIPTION	DATE	BY
1	VALID	6/1/2006	JSM
2	UPDATED TO NEW STYLE DETECTOR	7/8/2021	CMC

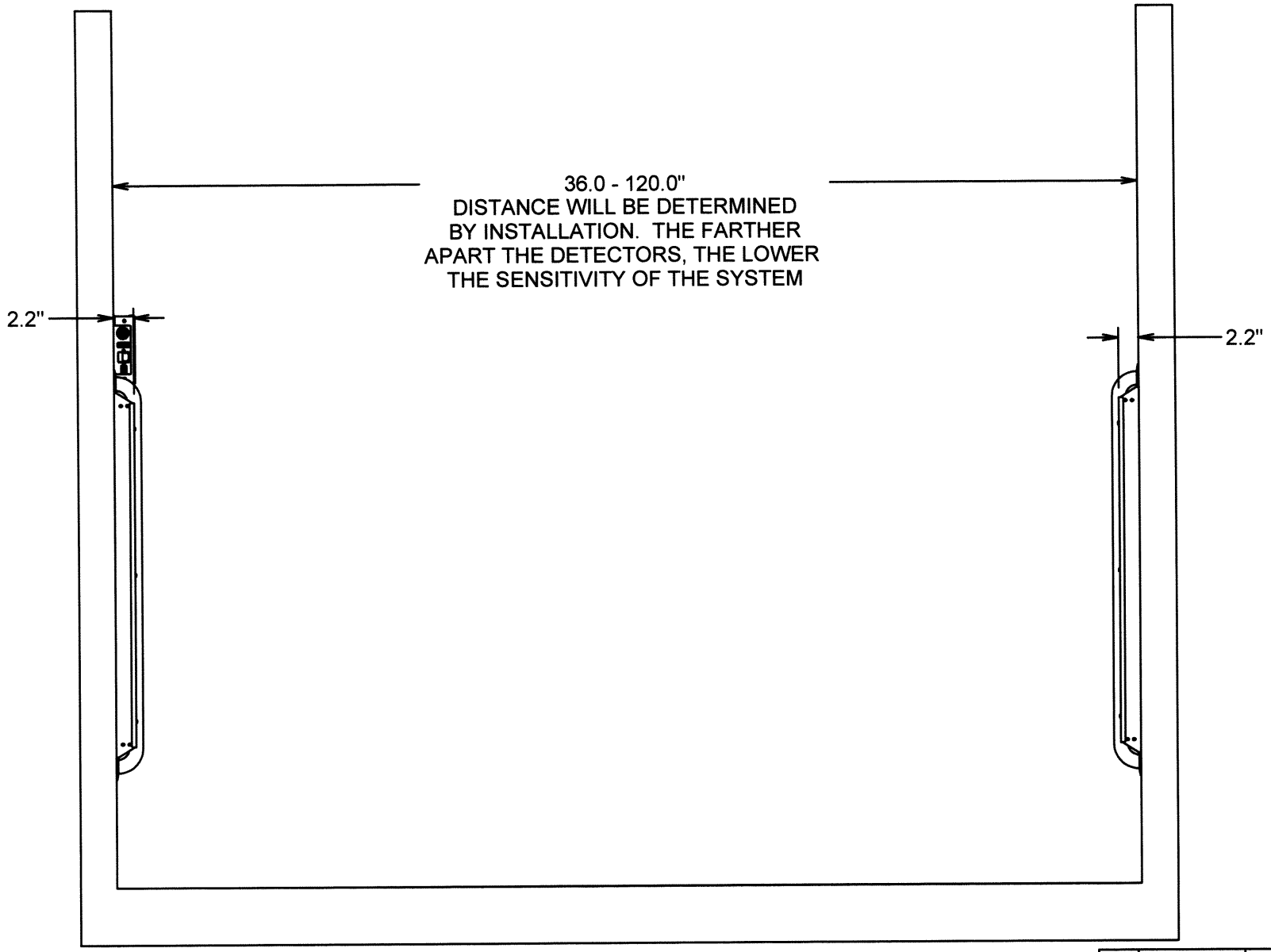

DWN	DATE	CHK	DATE	APP	DATE
CMC	7-8-21			JGW	7-8-21

DWG NUM: 4396-864B

SCALE: FULL ☐ OTHER

TITLE 375P-336 INST. SIDE VIEW

LUDLUM MEASUREMENTS, INC.
501 OAK STREET
SWEETWATER, TEXAS 79556

SERIES 396

SHEET 864B

REVISION HISTORY			
REV	DESCRIPTION	DATE	BY
1	VALID	6/1/2006	JSM
2	UPDATED TO NEW STYLE DETECTOR	7/8/2021	CMC

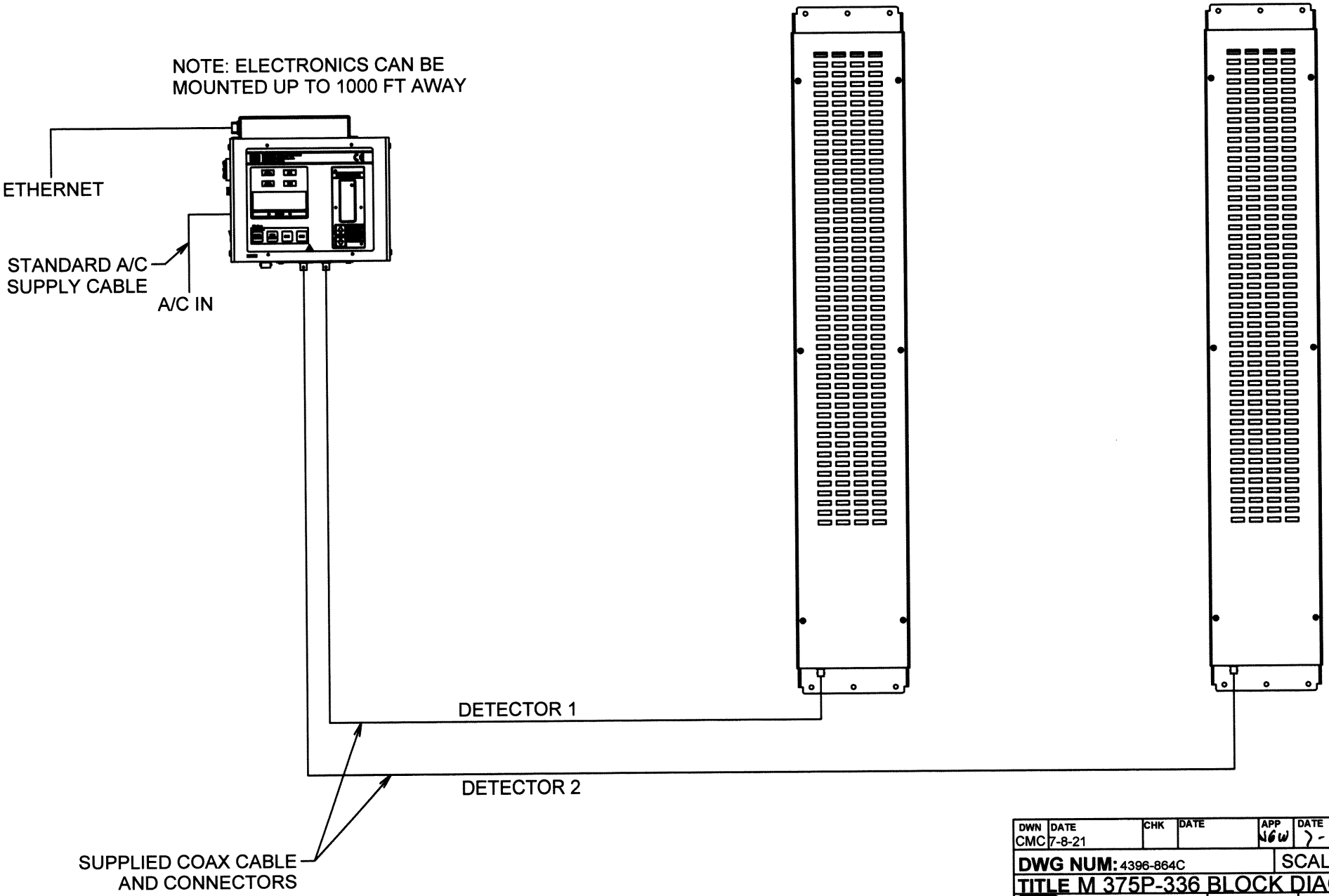

DWN	DATE	CHK	DATE	APP	DATE
CMC	7-8-21			MGW	7-8-21

DWG NUM: 4396-864C

SCALE: FULL ☐ OTHER

TITLE M 375P-336 BLOCK DIAGRAM

LUDLUM MEASUREMENTS, INC.
501 OAK STREET
SWEETWATER, TEXAS 79556

SERIES 396

SHEET 864C

REVISION HISTORY			
REV	DESCRIPTION	DATE	BY
1	VALID	4-10-03	JGW
2	ADDED GUSSETS	10/4/2019	JGW

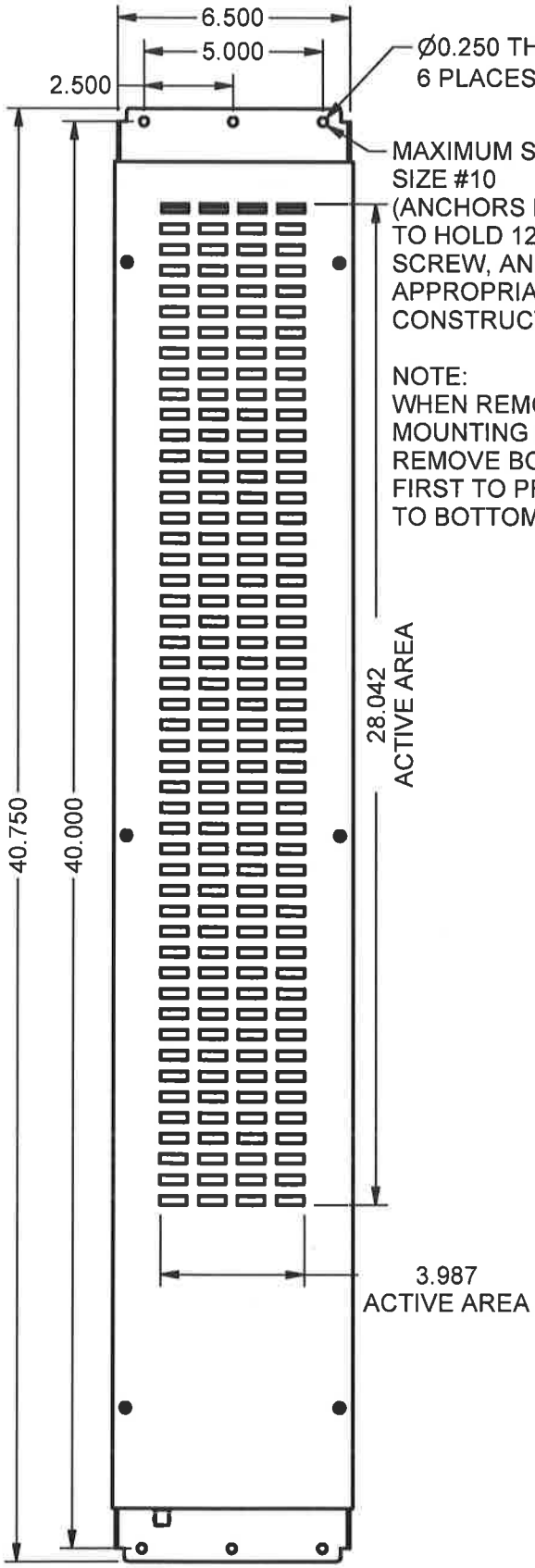

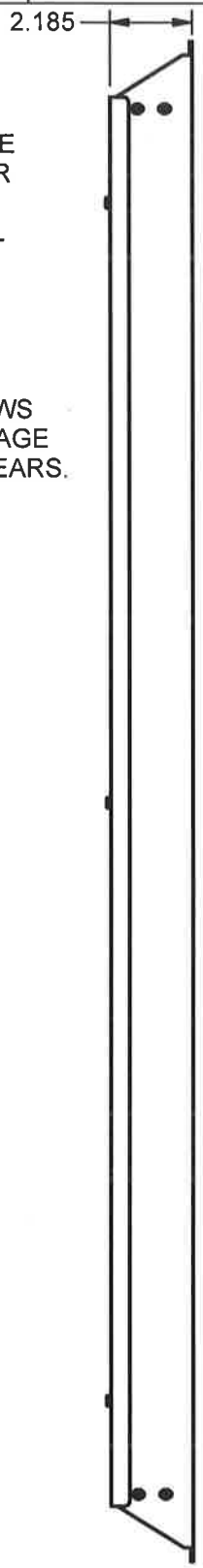

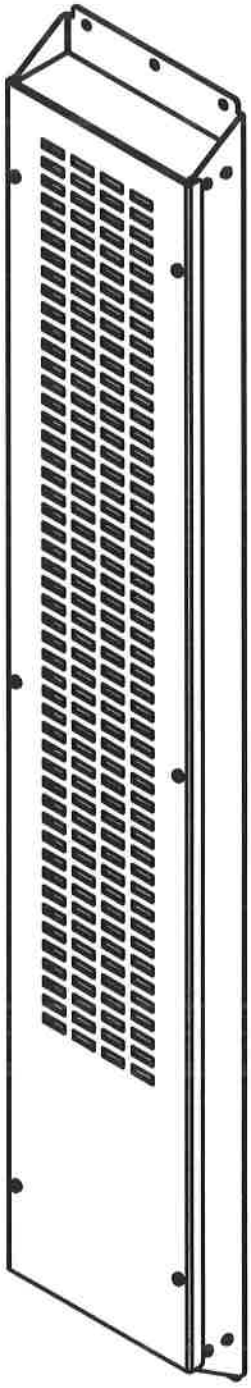

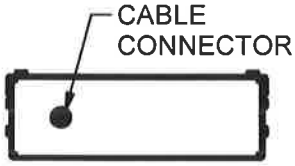

DWN	DATE	DESIGN AUTHORITY	APP	DATE
JGW	9-27-21	JGWITT	JGW	9-27-21

DWG NUM: 4215-415 SCALE:.2

TITLE M 44-151 OVERALL

LUDLUM MEASUREMENTS, INC.
501 OAK STREET
SWEETWATER, TEXAS 79556

SERIES	SHEET
215	415

REVISION HISTORY			
REV	DESCRIPTION	DATE	BY
1	VALID	1-15-02	TJR
2	7396-1174 WAS 7396-249	8/6/2018	TKC

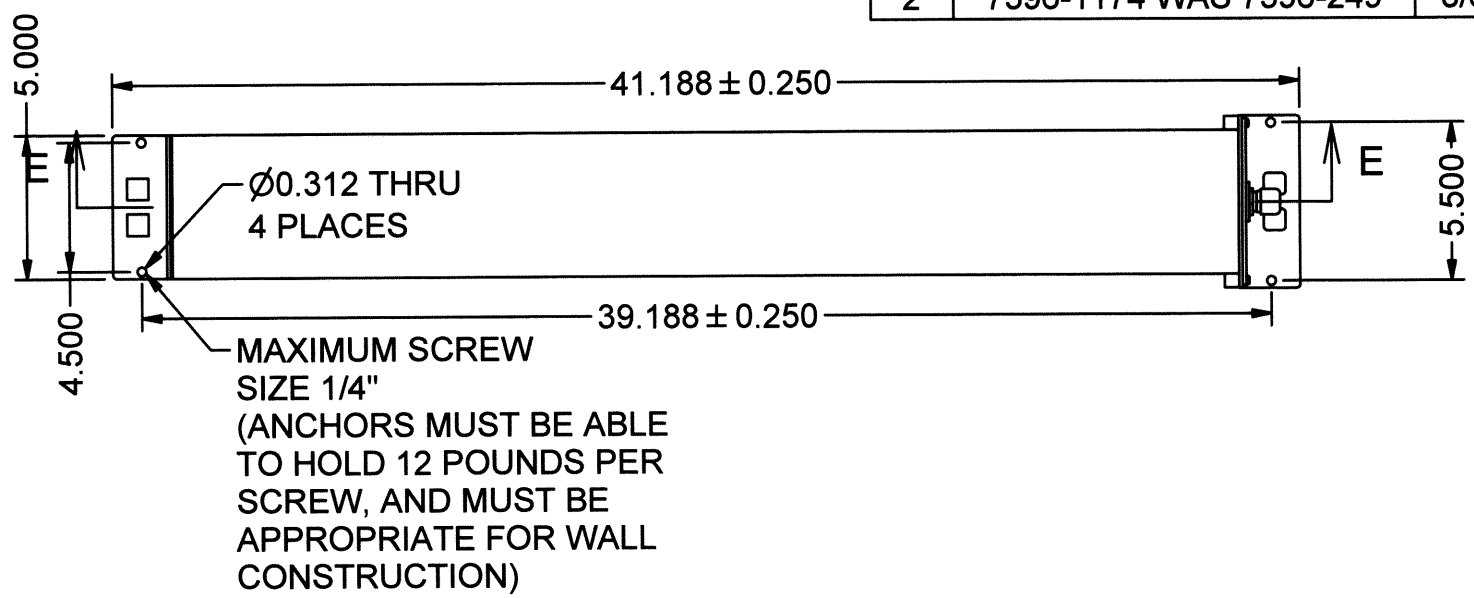

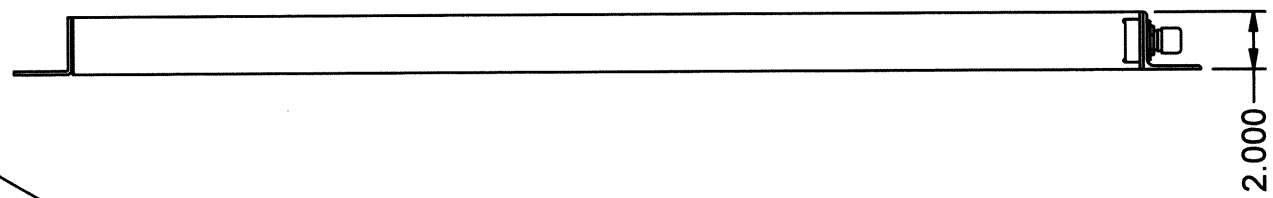

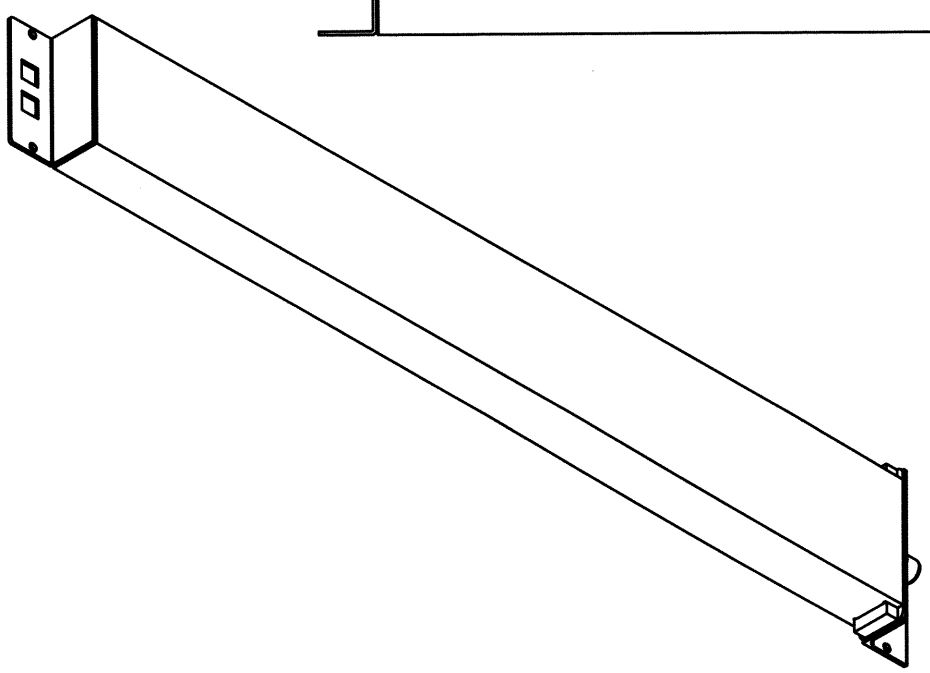

DWN	DATE	CHK	DATE	APP	DATE
CMC	7-9-21			JGW	7-9-21

DWG NUM: 4396-247 SCALE: .16

TITLE M 44-151-1 ASSEMBLY

LUDLUM MEASUREMENTS, INC.
501 OAK STREET
SWEETWATER, TEXAS 79556

SERIES 396 **SHEET** 247

REVISION HISTORY			
REV	DESCRIPTION	DATE	BY
1	VALID	06/17/19	ABM

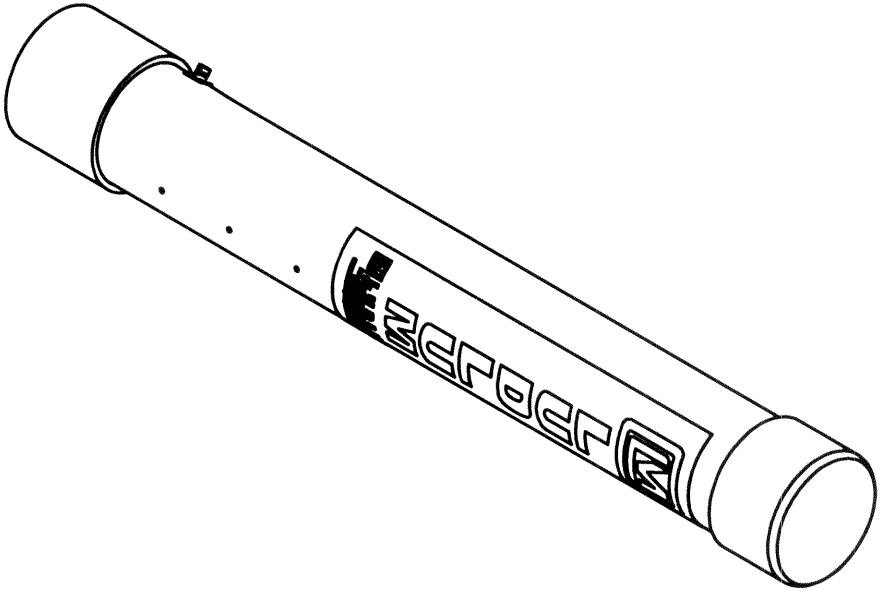

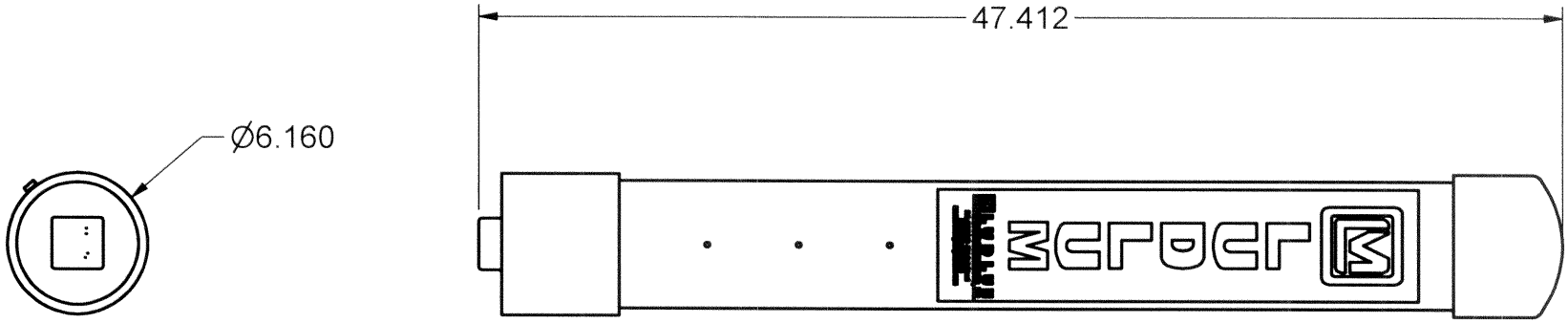

DWN	DATE	DESIGN AUTHORITY	APP	DATE
ABM	06/17/19	JWITT	JOW	6-17-19

DWG NUM: 4215-651 SCALE: 1/8

TITLE M 44-151-2 ASSEMBLY

LUDLUM MEASUREMENTS, INC.
501 OAK STREET
SWEETWATER, TEXAS 79556

SERIES	SHEET
215	651

NOTES:
A) KEEP DETECTOR AS CLOSE TO MATERIAL AS POSSIBLE WITHOUT SUBJECTING IT TO CONTINUOUS IMPACTS.

B) KEEP DETECTOR CENTERED ABOVE CONVEYOR. IF CONVEYOR IS WIDER THAN 6FT, THE DETECTOR SHOULD BE TURNED PERPENDICULAR TO THE DIRECTION OF TRAVEL OF THE CONVEYOR OR MULTIPLE DETECTORS SHOULD BE USED.

C) WEIGHT OF UNIT IS APPROX. 500 LBS. DETECTOR ALONE IS 65 LBS. DETECTOR SHOULD BE MOUNTED TO A STEEL PLATE, MINIMUM 1" THICK, MINIMUM OF 6"/ 15.24 cm OVERHANG ON ALL SIDES OF DETECTOR. SUGGESTED CHAIN IS SIZE 1/4 OR LARGER, GRADE 80 OR BETTER. SUGGESTED CABLE IS 3/16 DIA OR LARGER.

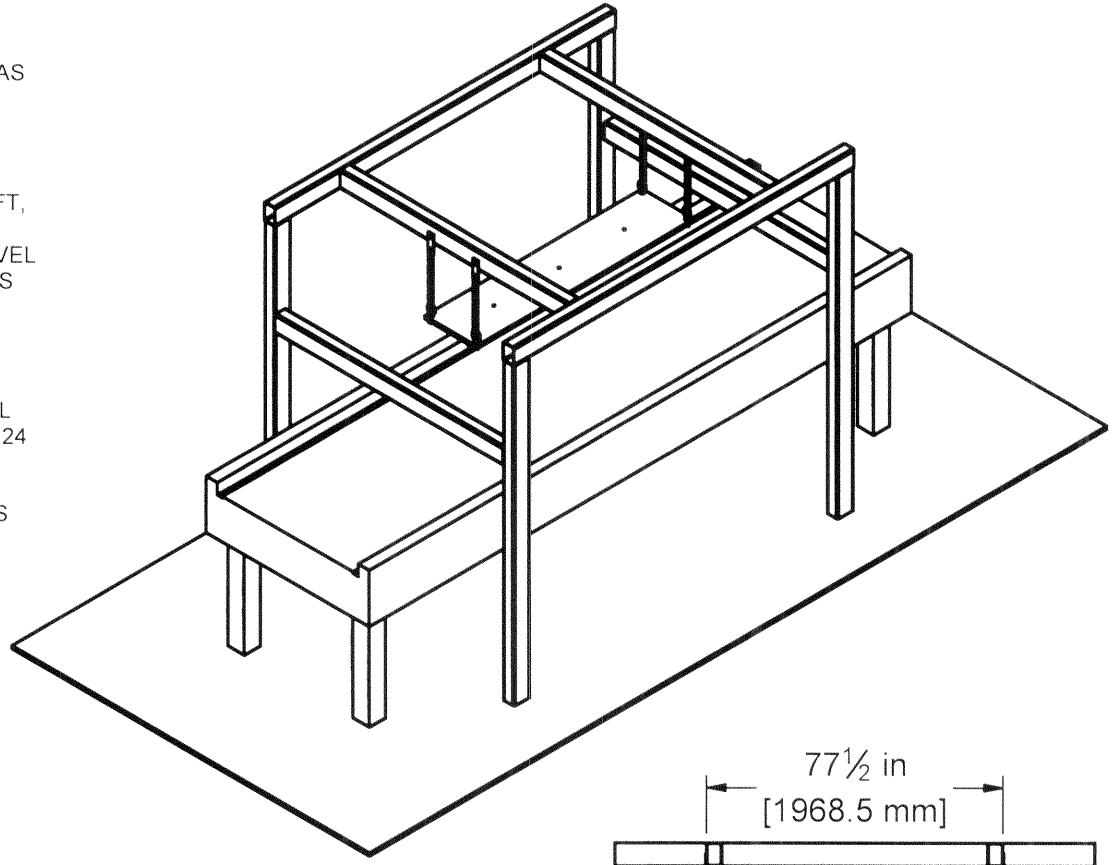

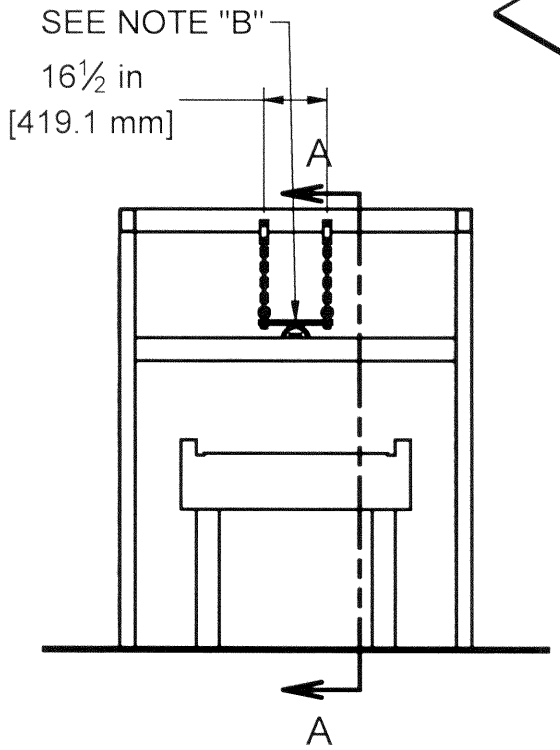

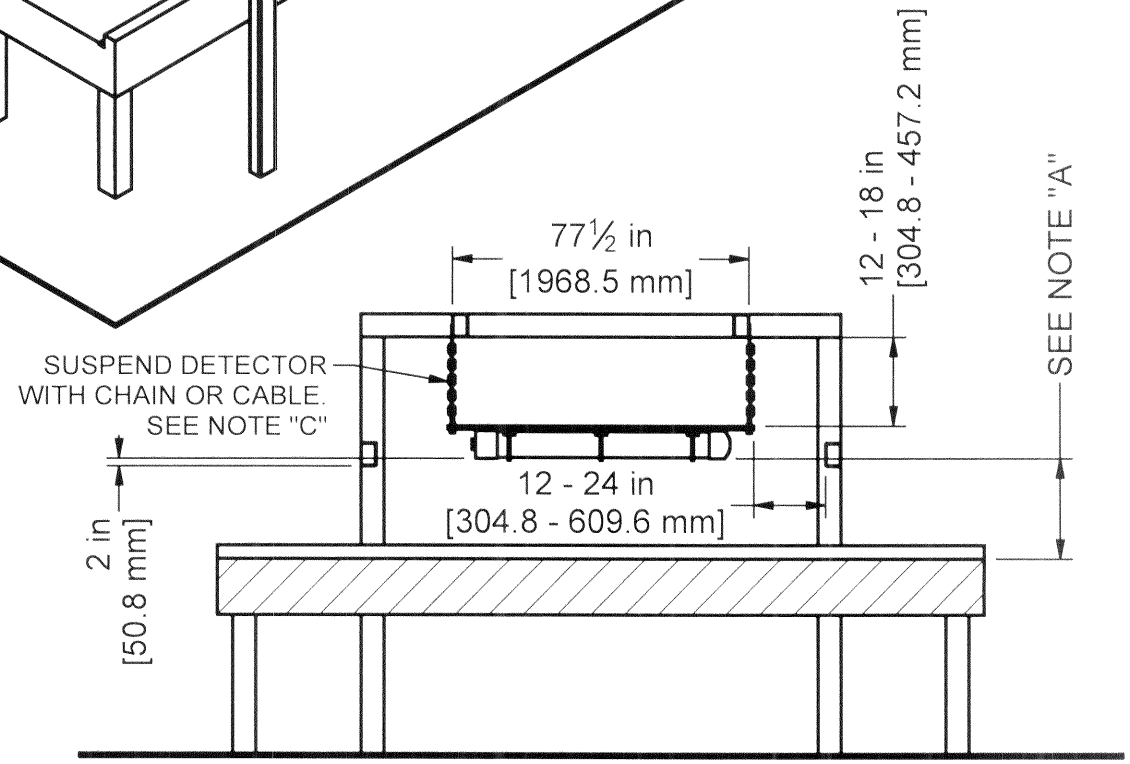

REVISION HISTORY			
REV	DESCRIPTION	DATE	BY
1	VALID	9/26/19	WJM

DWN	DATE	DESIGN AUTHORITY	APP	DATE
WJM	9/26/19	WJM	WJM	9-26-19

DWG NUM: 4384-1193 SCALE: 1/50

TITLE M 375P-500 CONVEYOR INSTALL

LUDLUM MEASUREMENTS, INC.
501 OAK STREET
SWEETWATER, TEXAS 79556

SERIES	SHEET
384	1193

NOTES:
A) KEEP DETECTOR AS CLOSE TO MATERIAL AS POSSIBLE WITHOUT SUBJECTING IT TO CONTINUOUS IMPACTS.

B) KEEP DETECTOR CENTERED ABOVE CONVEYOR. IF CONVEYOR IS WIDER THAN 7FT, THE DETECTOR SHOULD BE TURNED PERPENDICULAR TO THE DIRECTION OF TRAVEL OF THE CONVEYOR OR MULTIPLE DETECTORS SHOULD BE USED.

C) WEIGHT OF UNIT IS APPROX. 510 LBS. DETECTOR ALONE IS 75 LBS. DETECTOR SHOULD BE MOUNTED TO A STEEL PLATE, MINIMUM 1" THICK, MINIMUM OF 6"/ 15.24 cm OVERHANG ON ALL SIDES OF DETECTOR. SUGGESTED CHAIN IS SIZE 1/4 OR LARGER, GRADE 80 OR BETTER. SUGGESTED CABLE IS 3/16 DIA OR LARGER.

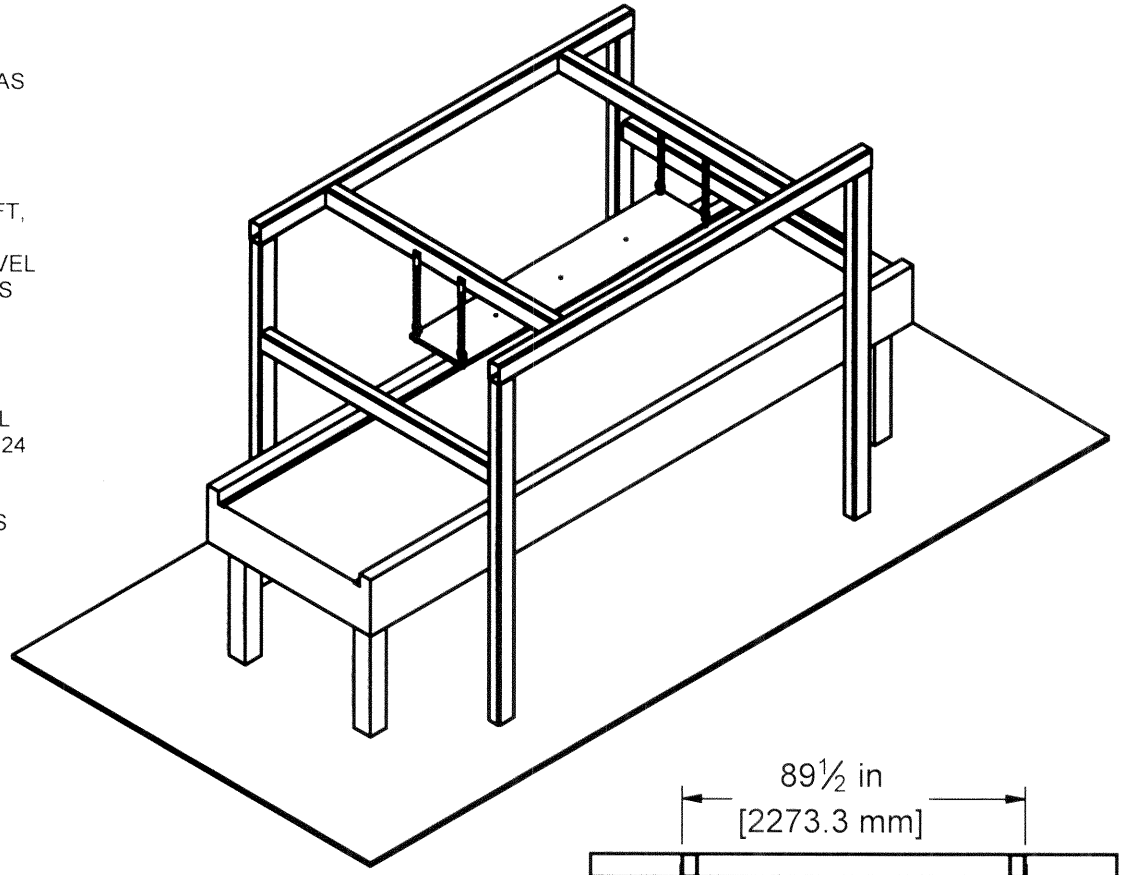

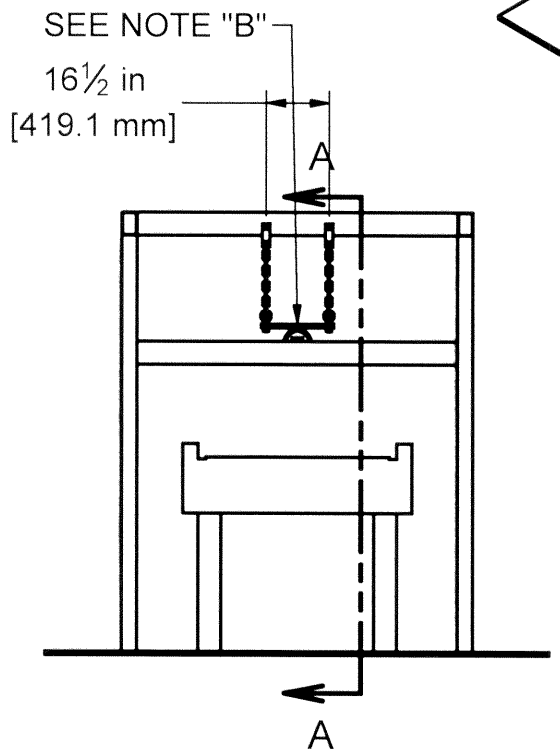

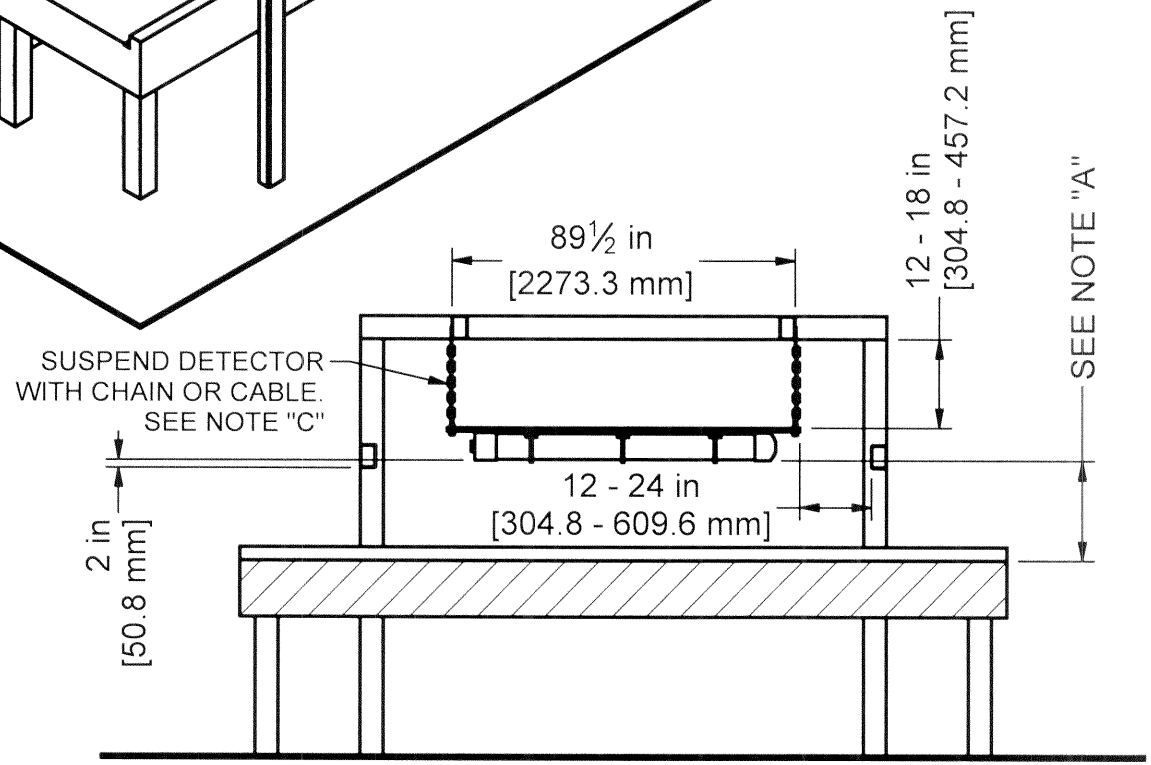

REVISION HISTORY			
REV	DESCRIPTION	DATE	BY
1	VALID	9/26/19	WJM

DWN	DATE	DESIGN AUTHORITY	APP	DATE
WJM	9/26/19	WJM	WJM	9-26-19

DWG NUM: 4384-1194 SCALE: 1/50

TITLE M 375P-600-1 CONVEYOR INSTALL

LUDLUM MEASUREMENTS, INC
501 OAK STREET
SWEETWATER, TEXAS 79556

SERIES	SHEET
384	1194

REV #	ALTERATIONS	DATE	BY
1	VALID	4-23-02	JGW

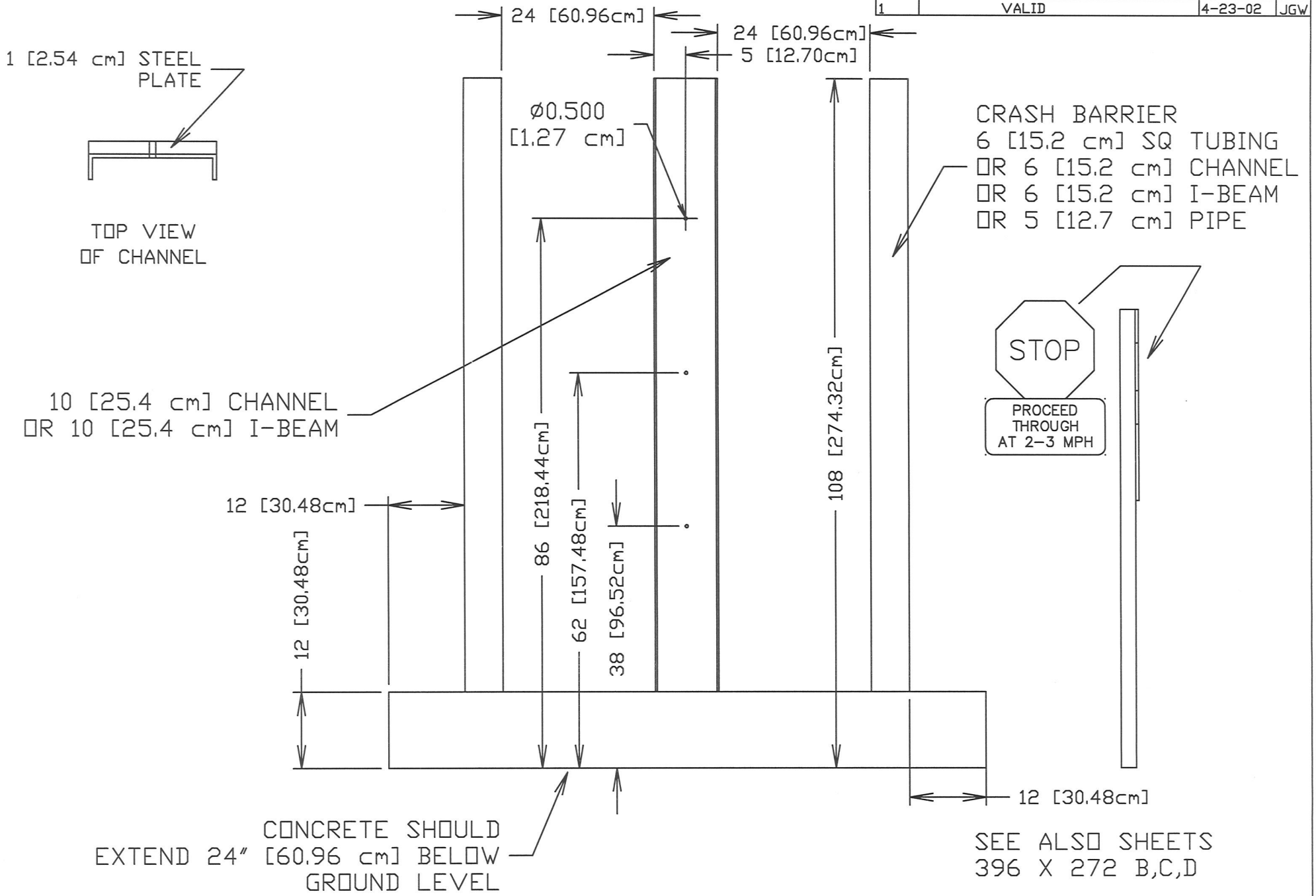

DWN	DATE	CHECKED	APPROVED
TMN	6-21-10		NOW 6-21-10

TITLE: M 375P-1K LOOKING AT DETECTOR

LUDLUM MEASUREMENTS, INC.
501 OAK STREET
SWEETWATER, TEXAS 79556

SERIES	SHEET
396	272A

REV #	ALTERATIONS	DATE	BY
1	VALID	4-23-02	JGW

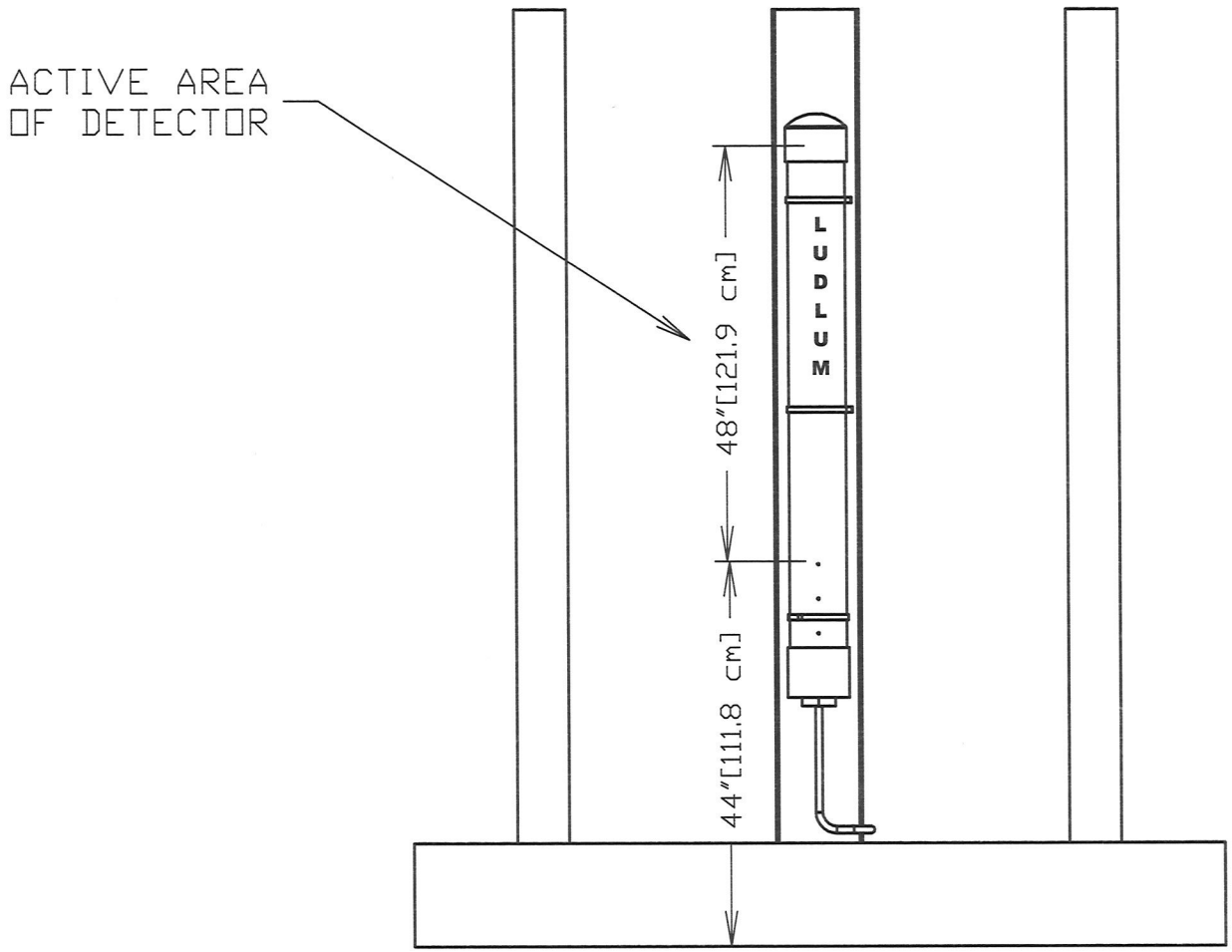

HEIGHT WILL BE DETERMINED BY INSTALLATION. EXCLUSIVE TRUCK OR RAIL USE MAY REQUIRE RAISING DETECTORS.

SEE ALSO SHEETS
396 X 272 A,C,D

DWN	DATE	CHECKED	APPROVED
JLV	5/27/16		JGW 5-27-16

TITLE: M 375P-1K LOOKING AT DETECTOR

LUDLUM MEASUREMENTS, INC.
501 OAK STREET
SWEETWATER, TEXAS 79556

SERIES	SHEET
396	272B

VF

REV #	ALTERATIONS	DATE	BY
	VALID	4-23-02	JGW
2	ADDED BUFFER ZONE AND SCALE	8-18-16	CMC

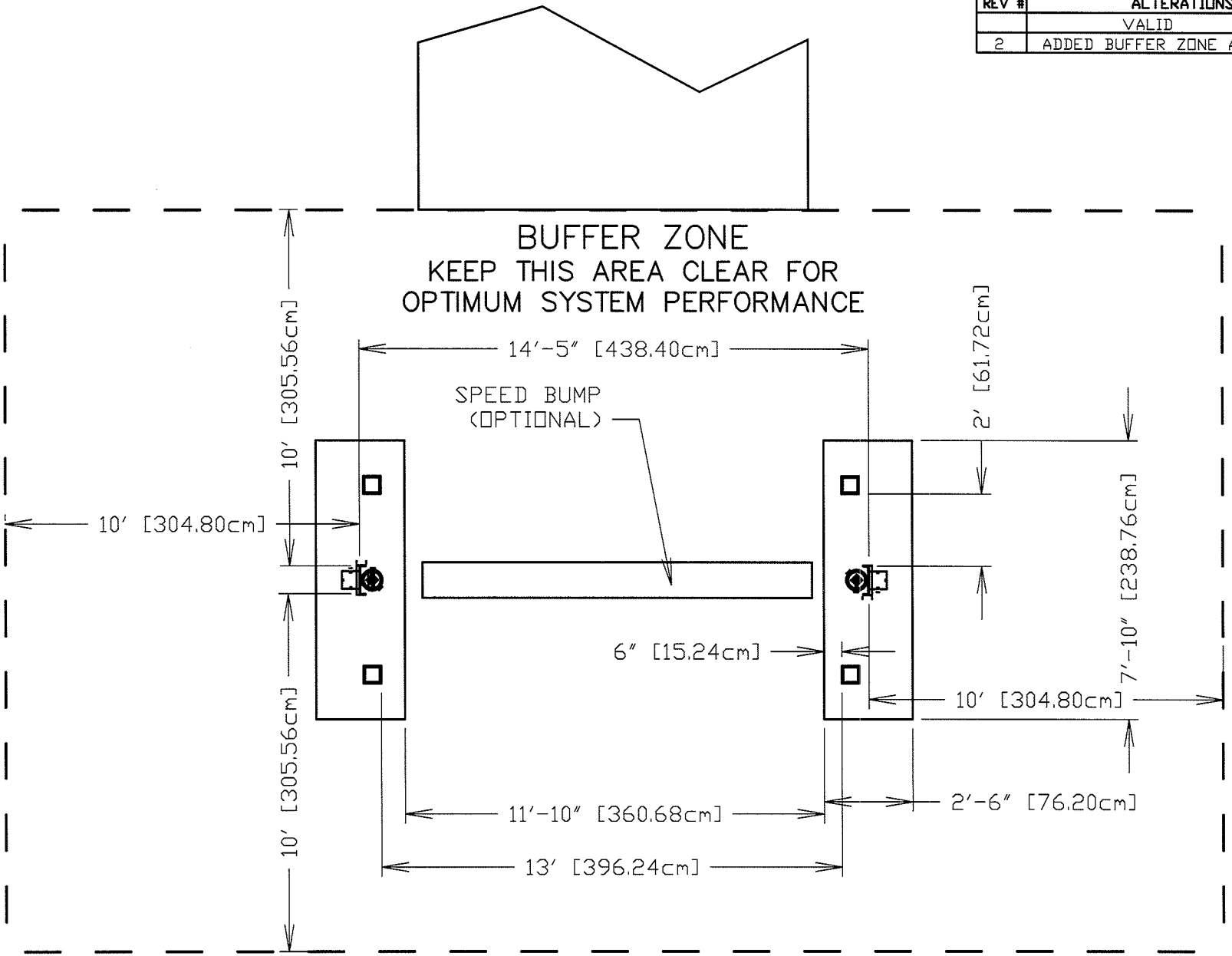

SEE ALSO SHEETS
396 X 272 A,B,D

DWN	DATE	CHECKED	APPROVED
CMC	8-18-16		JGW 8-18-16

TITLE: M 375P-1K AERIAL VIEW

LUDLUM MEASUREMENTS, INC.
501 OAK STREET
SWEETWATER, TEXAS 79556

SERIES	SHEET
396	272C

REV #	ALTERATIONS	DATE	BY
	VALID	4-23-02	JGW
2	ADDED SCALE AND BUFFER ZONE	8-18-16	CMC

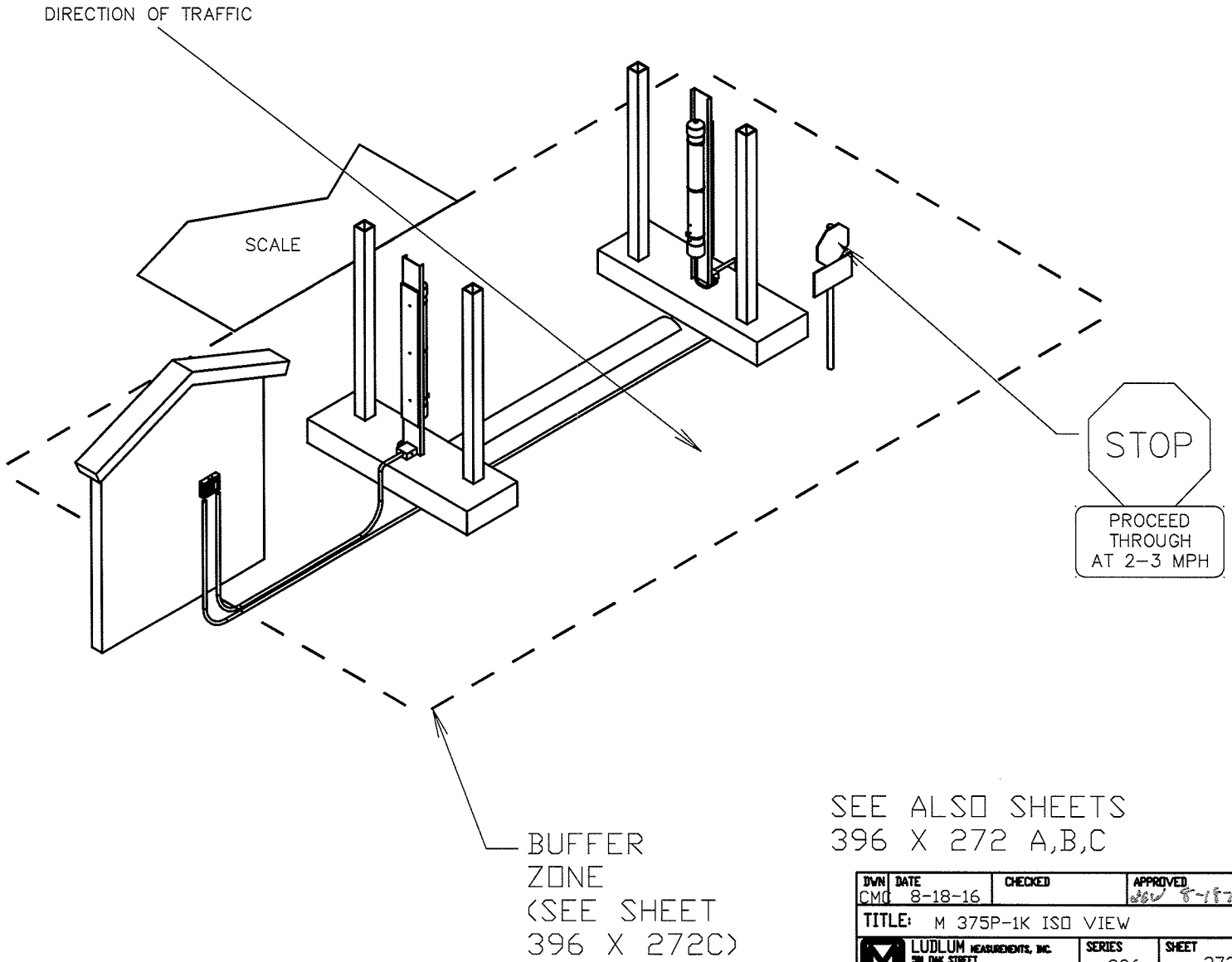

SEE ALSO SHEETS
396 X 272 A,B,C

DWN	DATE	CHECKED	APPROVED
CMC	8-18-16		JGW 8-18-16

TITLE: M 375P-1K ISO VIEW

LUDLUM MEASUREMENTS, INC.
501 OAK STREET
SWEETWATER, TEXAS 79556

SERIES	SHEET
396	272D

REVISION HISTORY			
REV	DESCRIPTION	DATE	BY
1	VALID	3/11/13	CMC

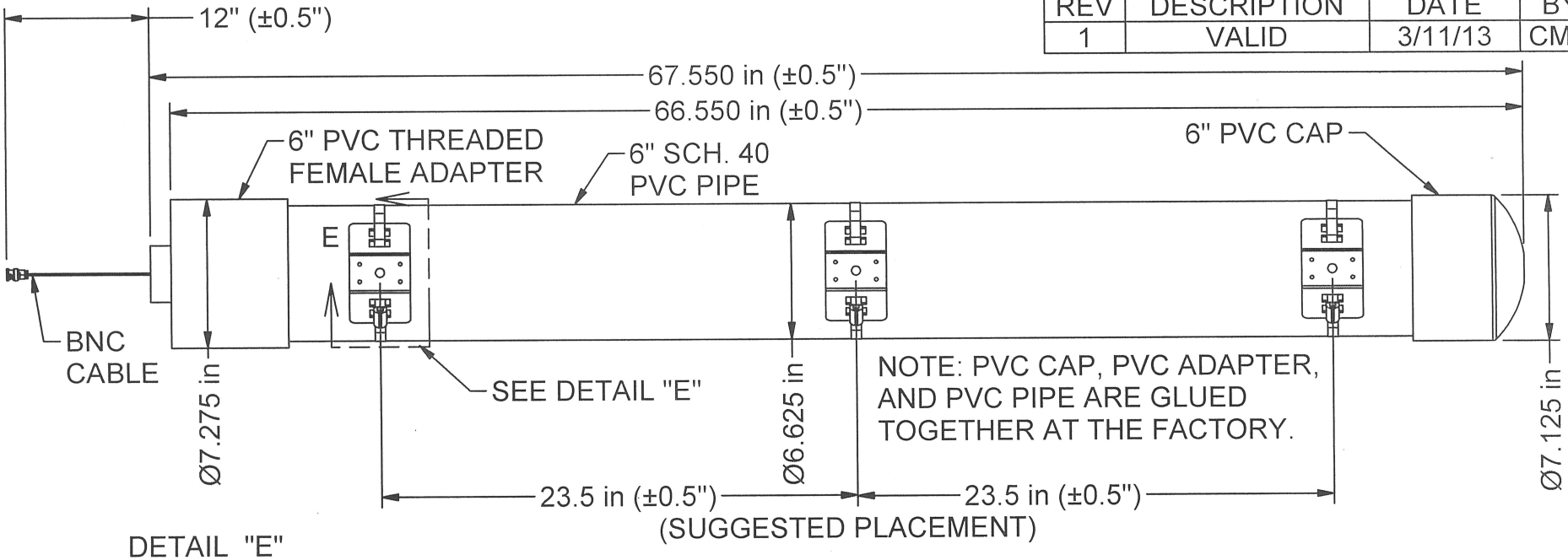

DETAIL "E"
(TYPICAL 3 PLACES)

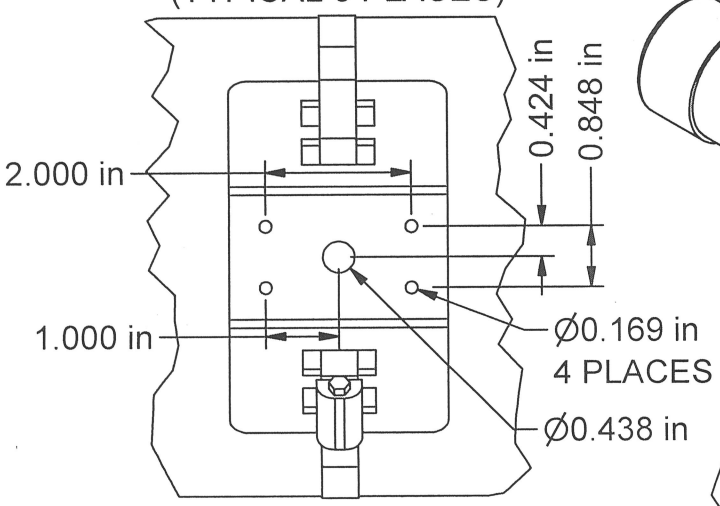

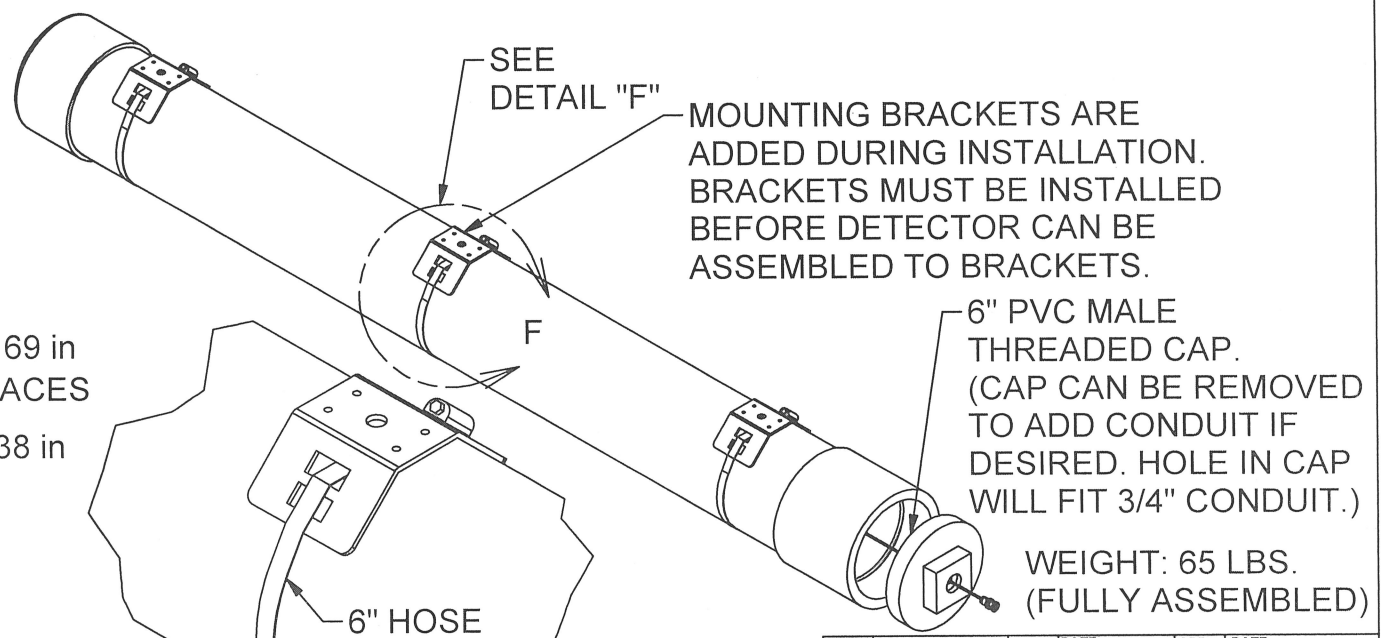

DETAIL "F"

DWN	DATE	CHK	DATE	APP	DATE
CMC	3/11/2013			JGW	3-11-13

DWG NUM: 4385-471 SCALE: 1/8

TITLE M 44-128-1 OVERALL

LUDLUM MEASUREMENTS, INC.
501 OAK STREET
SWEETWATER, TEXAS 79556

SERIES 385 **SHEET** 471

REVISION HISTORY			
REV	DESCRIPTION	DATE	BY
1	VALID	4-19-19	JGW

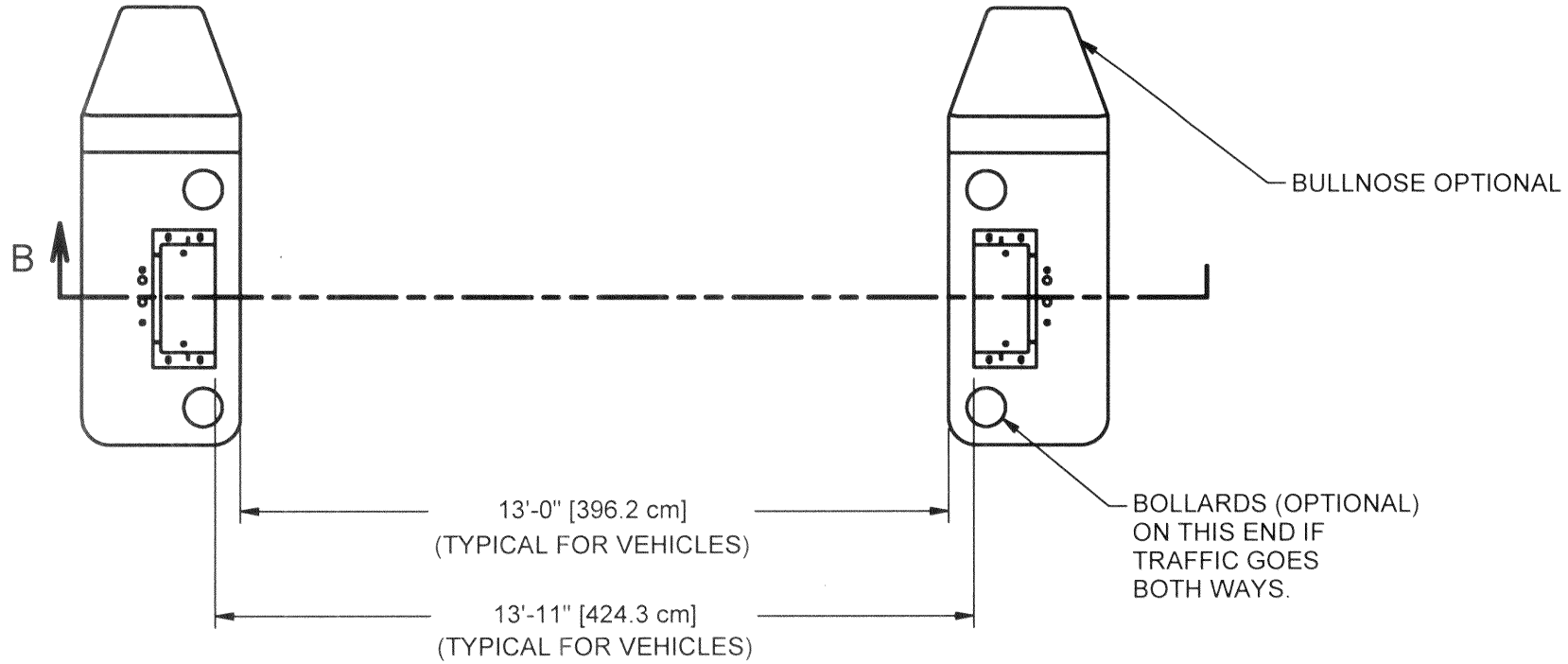

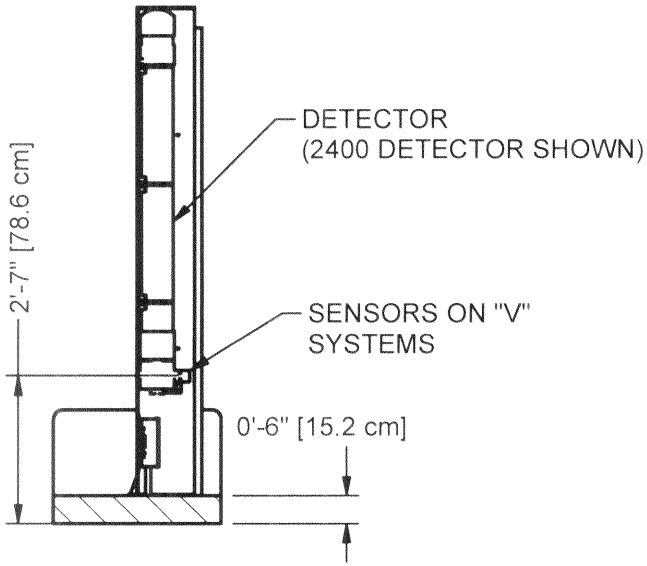

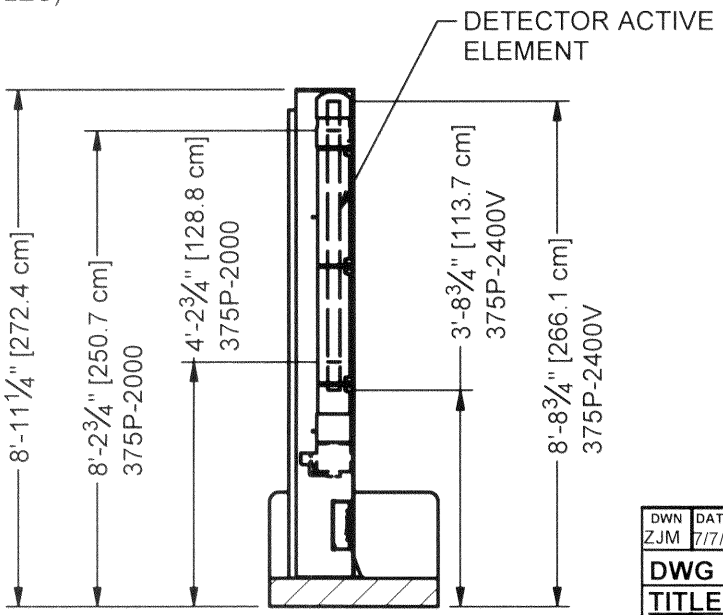

ELECTRONICS
MOUNTED IN THE
NEAREST STRUCTURE
100-150 FEET AWAY.

CAN BE USED FOR THE
FOLLOWING MODELS:
375P-2000
375P-2000V
375P-2400V
OR SIMILAR

DWN	DATE	CHK	DATE	APP	DATE
ZJM	7/7/2020			JGW	7-7-20

DWG NUM: 4396-1180 SCALE: 1/40

TITLE M 375P-2000 FAMILY INSTALL

LUDLUM MEASUREMENTS, INC.
501 OAK STREET
SWEETWATER, TEXAS 79556

SERIES 396 SHEET 1180

REVISION HISTORY			
REV	DESCRIPTION	DATE	BY
1	VALID	4-19-19	JGW

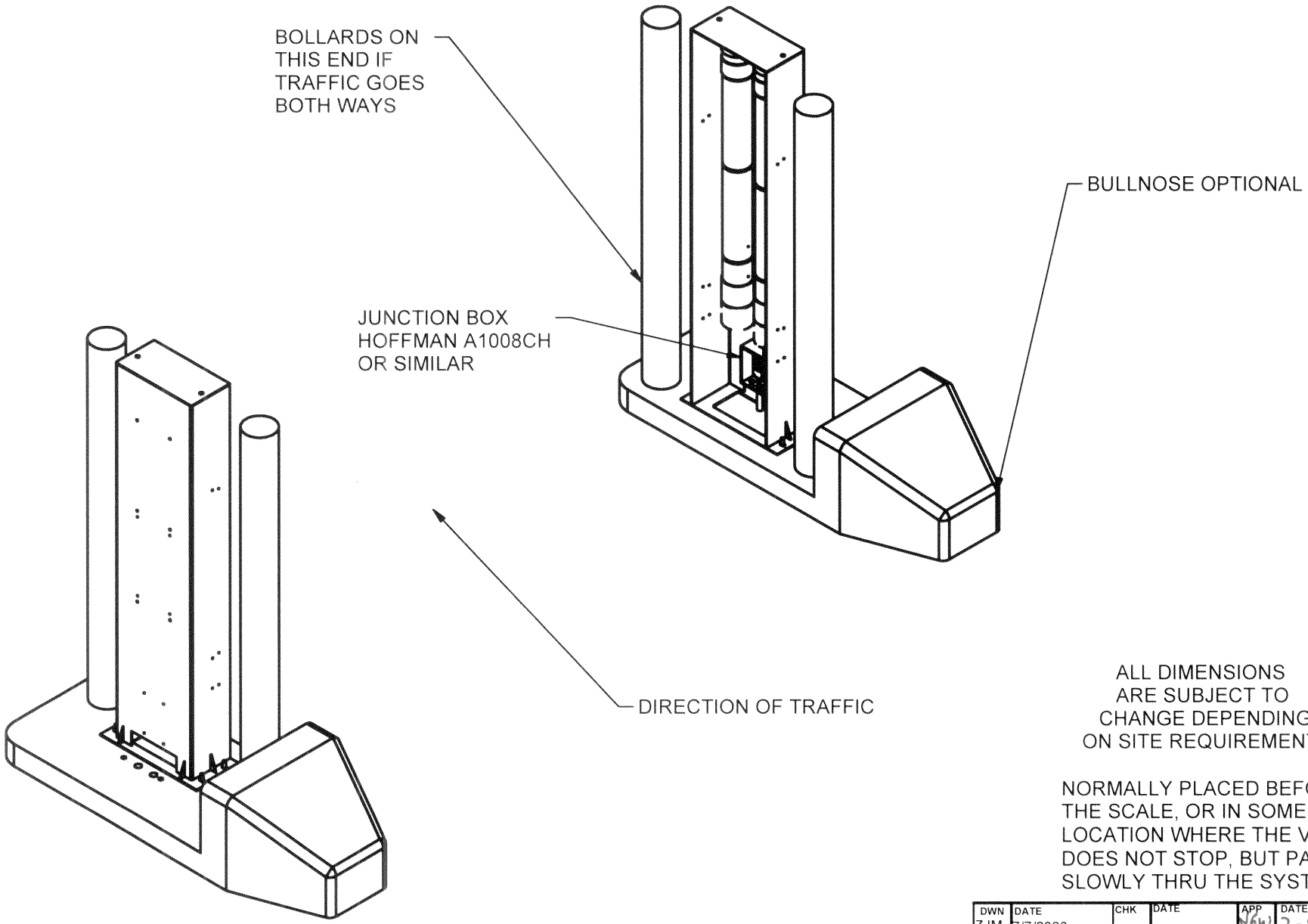

ALL DIMENSIONS ARE SUBJECT TO CHANGE DEPENDING ON SITE REQUIREMENTS

NORMALLY PLACED BEFORE THE SCALE, OR IN SOME LOCATION WHERE THE VEHICLE DOES NOT STOP, BUT PASSES SLOWLY THRU THE SYSTEM.

DWN	DATE	CHK	DATE	APP	DATE
ZJM	7/7/2020			JGW	7-8-20

DWG NUM: 4396-1180 SCALE: 1/32

TITLE M 375P-2000 FAMILY INSTALL

LUDLUM MEASUREMENTS, INC.
501 OAK STREET
SWEETWATER, TEXAS 79556

SERIES 396 **SHEET** 1180A

REVISION HISTORY			
REV	DESCRIPTION	DATE	BY
1	VALID	4-19-19	JGW

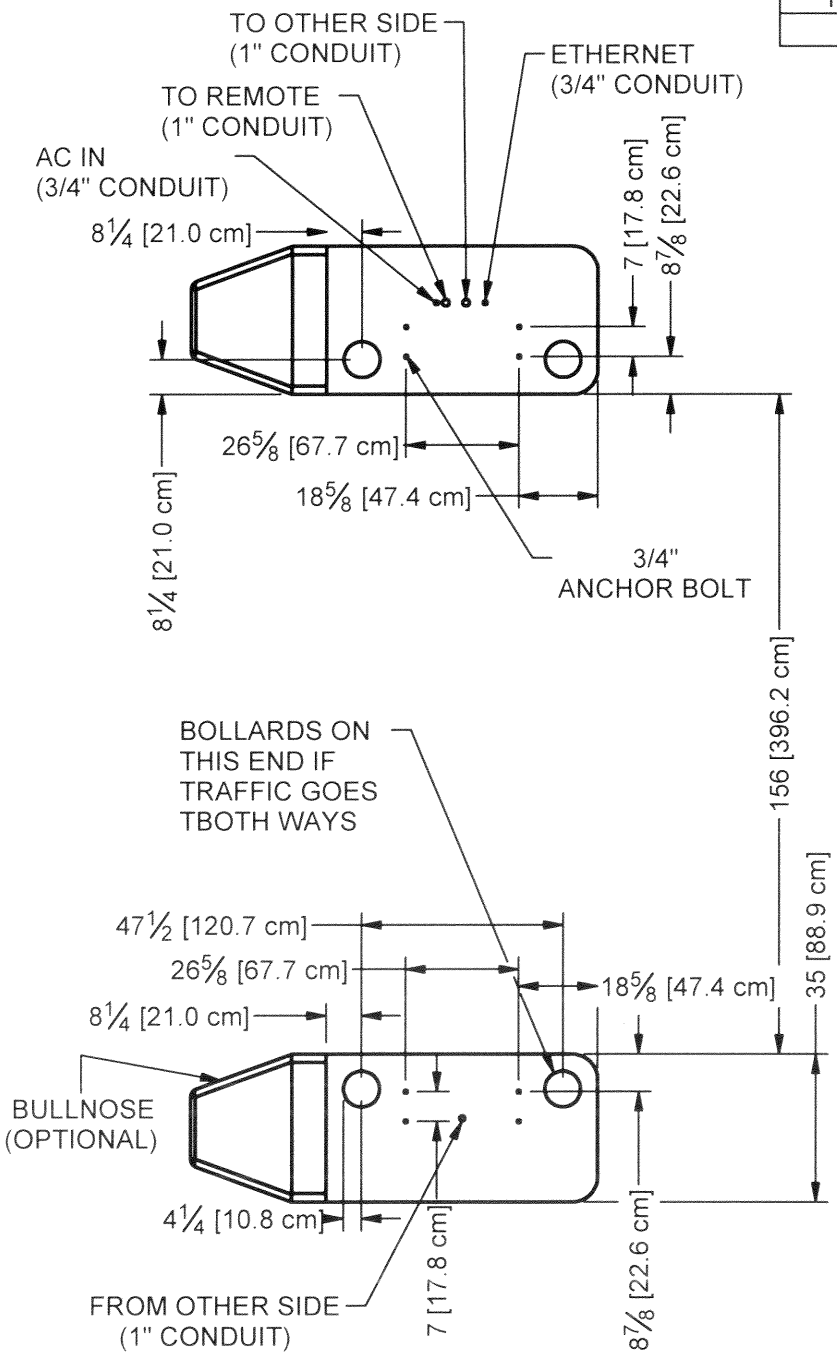

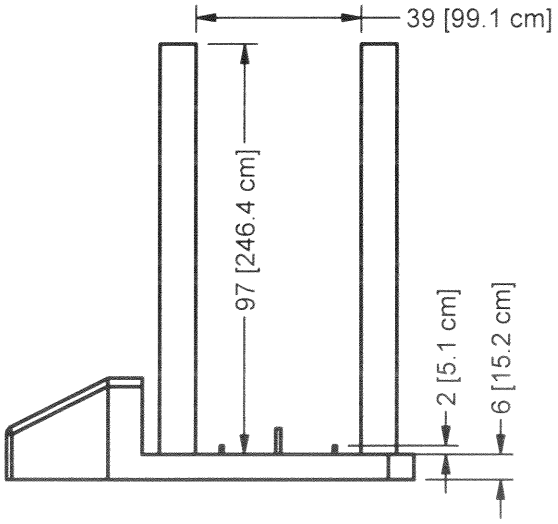

SEE SHEET 511X836(A) FOR CONCRETE AND ANCHOR BOLT DETAILS.

(OPTIONAL) BOLLARDS ARE 8" PIPE OR SIMILAR, FILLED WITH CONCRETE. (NOT SUPPLIED)

ALL DIMENSIONS ARE SUBJECT TO CHANGE DEPENDING ON SITE REQUIREMENTS.

NOTE: FOR EXCLUSIVE TRUCK OR RAIL USE, EVERYTHING SHOULD BE MOVED UP BY 18"

DWN	DATE	CHK	DATE	APP	DATE
ZJM	7/7/2020			JGW	7-8-20

DWG NUM: 4396-1180 SCALE: 1/40

TITLE M 375P-2000 FAMILY INSTALL

LUDLUM MEASUREMENTS, INC
501 OAK STREET
SWEETWATER, TEXAS 79556

SERIES 396 **SHEET** 1180B

REVISION HISTORY			
REV	DESCRIPTION	DATE	BY
1	VALID	4-19-19	JGW

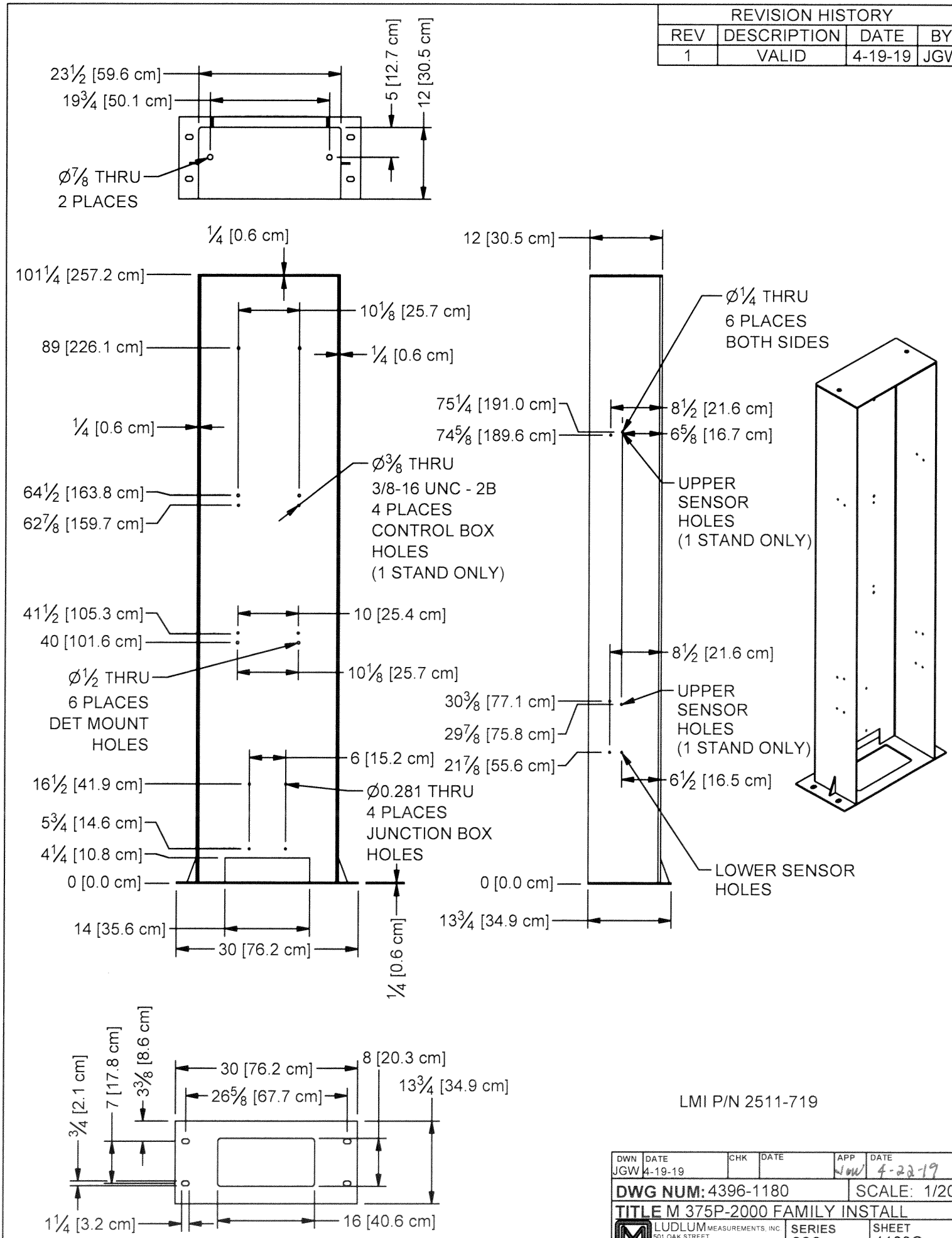

LMI P/N 2511-719

DWN	DATE	CHK	DATE	APP	DATE
JGW	4-19-19			NOW	4-22-19

DWG NUM: 4396-1180 | SCALE: 1/20

TITLE M 375P-2000 FAMILY INSTALL

LUDLUM MEASUREMENTS, INC.
501 OAK STREET
SWEETWATER, TEXAS 79556

SERIES	SHEET
396	1180C

REVISION HISTORY			
REV	DESCRIPTION	DATE	BY
1	VALID	4-19-19	JGW

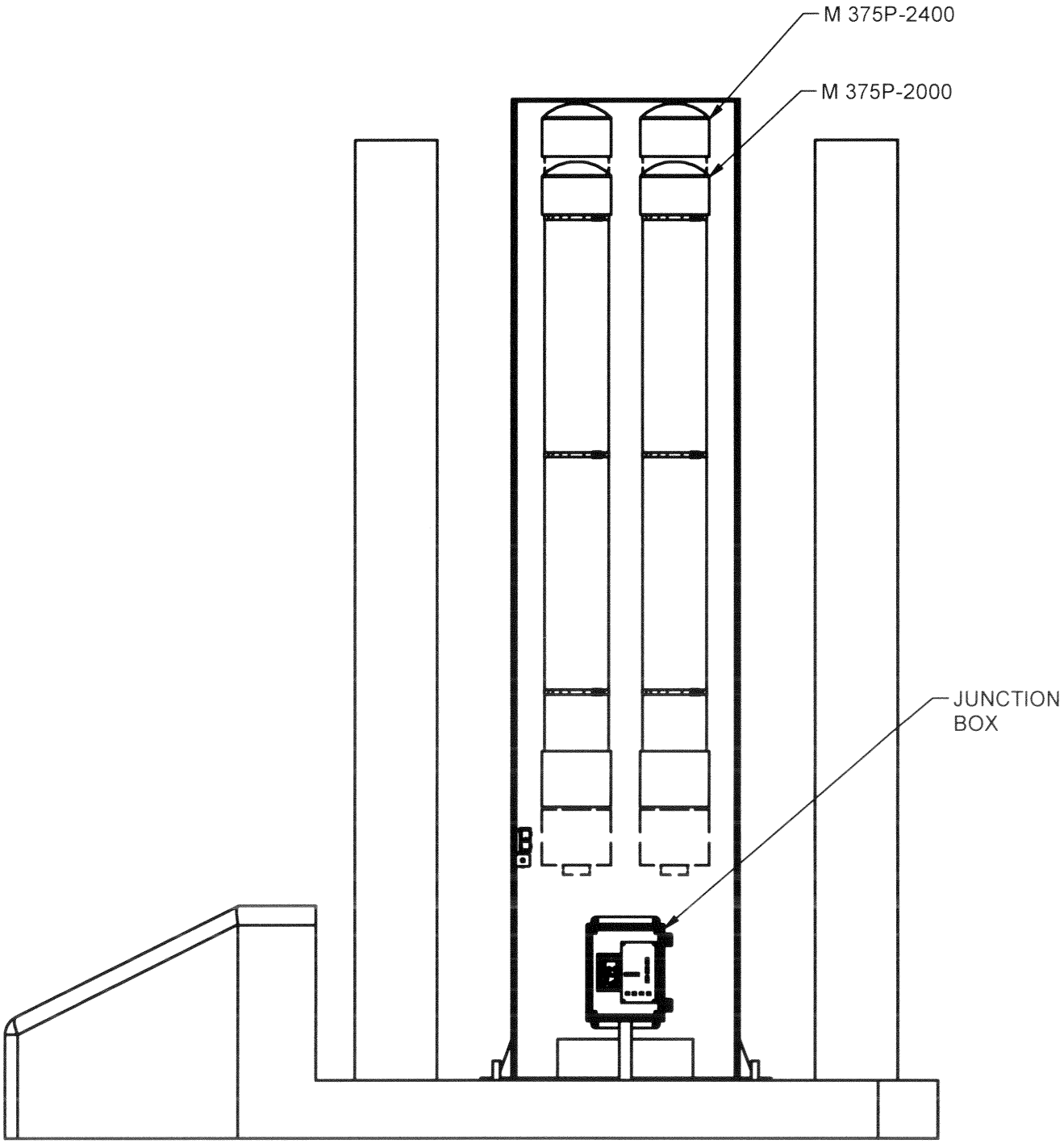

DWN	DATE	CHK	DATE	APP	DATE
ZJM	7/7/2020			JGW	7-8-20

DWG NUM: 4396-1180 SCALE: 1/16

TITLE M 375P-2000 FAMILY INSTALL

LUDLUM MEASUREMENTS, INC
501 OAK STREET
SWEETWATER, TEXAS 79556

SERIES 396 **SHEET** 1180D

REVISION HISTORY			
REV	DESCRIPTION	DATE	BY
1	VALID	7/8/20	ZJM

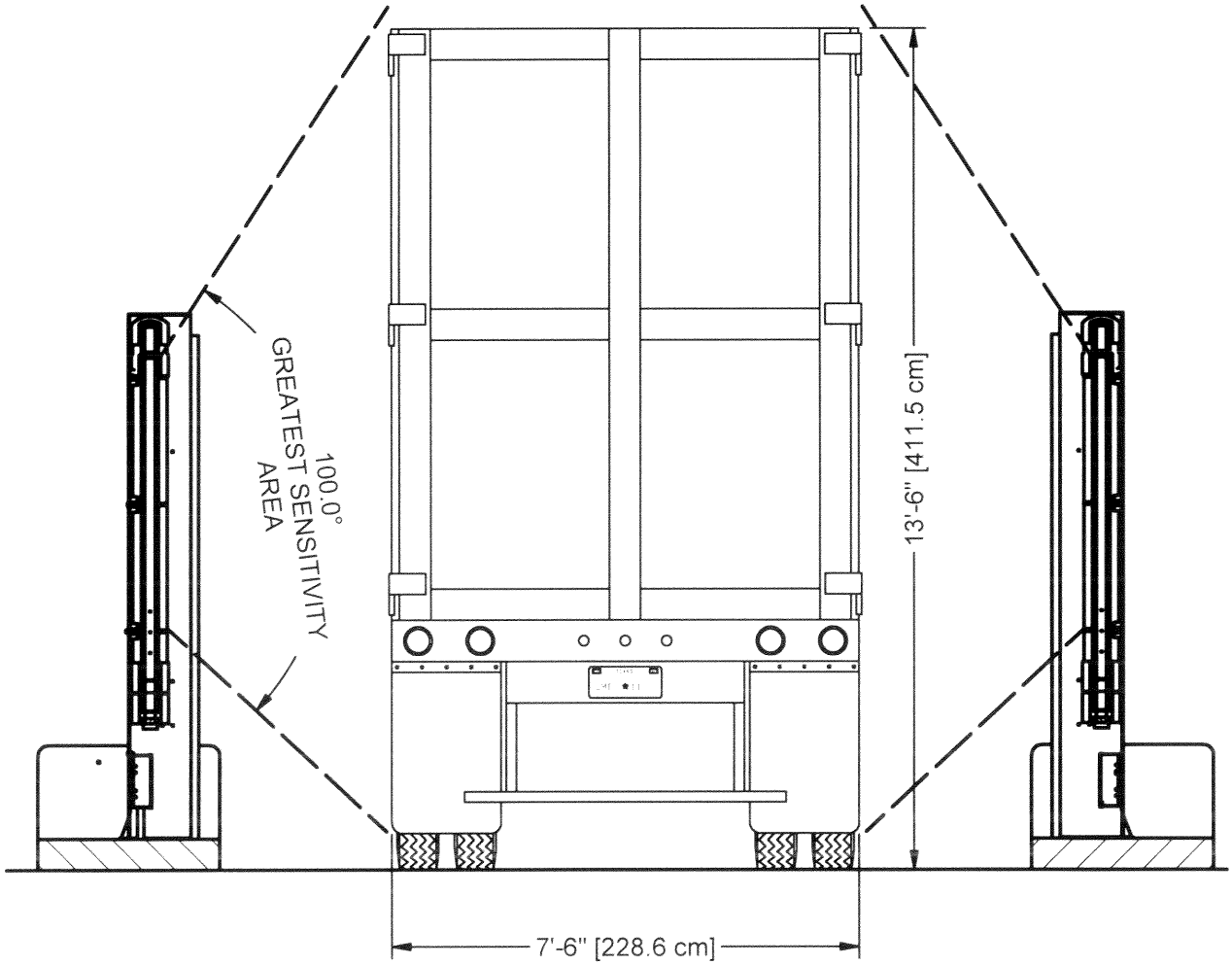

ALL DIMENSIONS ARE SUBJECT TO CHANGE DEPENDING ON SITE REQUIREMENTS.

SENSITIVITY NOTE:
AREA SHOWN IS THE GREATEST SENSITIVITY AREA. THE SYSTEM WILL DETECT RADIATION OUTSIDE OF THAT AREA, BUT WITH REDUCED SENSITIVITY.

DWN	DATE	CHK	DATE	APP	DATE
ZJM	7/8/2020			KW	7-8-20

DWG NUM: 4396-1180 SCALE: 1/36

TITLE M 375P-2000 FAMILY INSTALL

LUDLUM MEASUREMENTS, INC
501 OAK STREET
SWEETWATER, TEXAS 79556

SERIES 396 **SHEET** 1180E

NOTES:
A) KEEP DETECTOR AS CLOSE TO MATERIAL AS POSSIBLE WITHOUT SUBJECTING IT TO CONTINUOUS IMPACTS.

B) KEEP DETECTOR CENTERED ABOVE CONVEYOR. IF CONVEYOR IS WIDER THAN 7FT, THE DETECTOR SHOULD BE TURNED PERPENDICULAR TO THE DIRECTION OF TRAVEL OF THE CONVEYOR OR MULTIPLE DETECTORS SHOULD BE USED.

C) WITH OPTIONAL SHIELD BOX AS SHOWN, WEIGHT OF UNIT IS APPROX. 2000 LBS. DETECTOR ALONE IS 600 LBS.
IF SHIELDING BOX IS NOT USED, THEN DETECTOR SHOULD BE MOUNTED TO A STEEL PLATE, MINIMUM 0.500" THICK, MINIMUM OF 6"/ 15.24 cm OVERHANG ON ALL SIDES OF DETECTOR.
SUGGESTED CHAIN IS SIZE 1/4 OR LARGER, GRADE 80 OR BETTER. SUGGESTED CABLE IS 3/16 DIA OR LARGER.

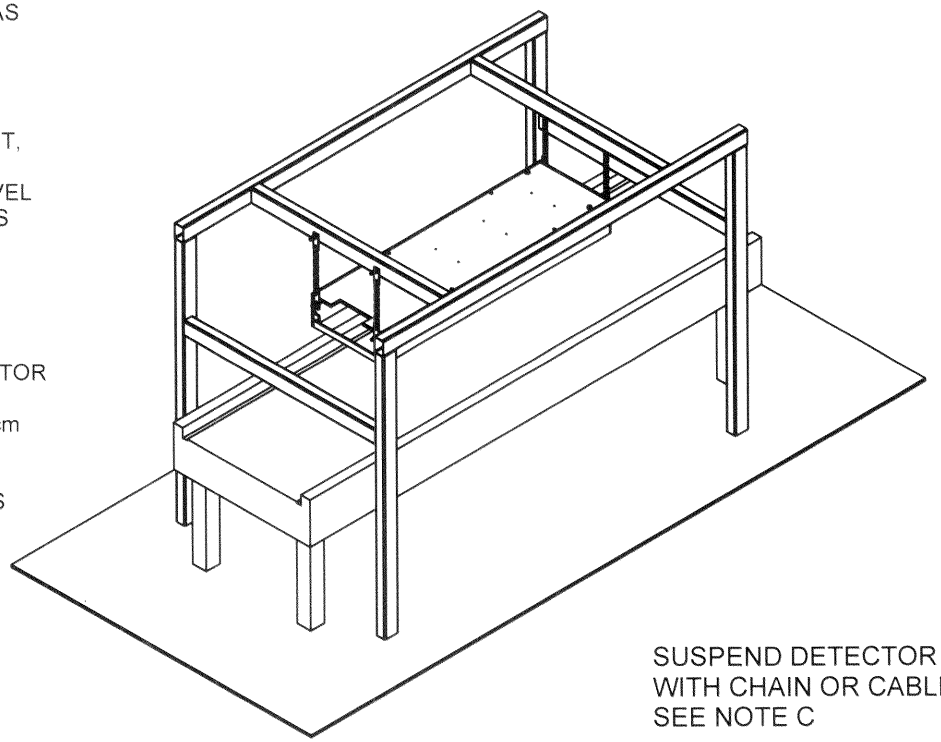

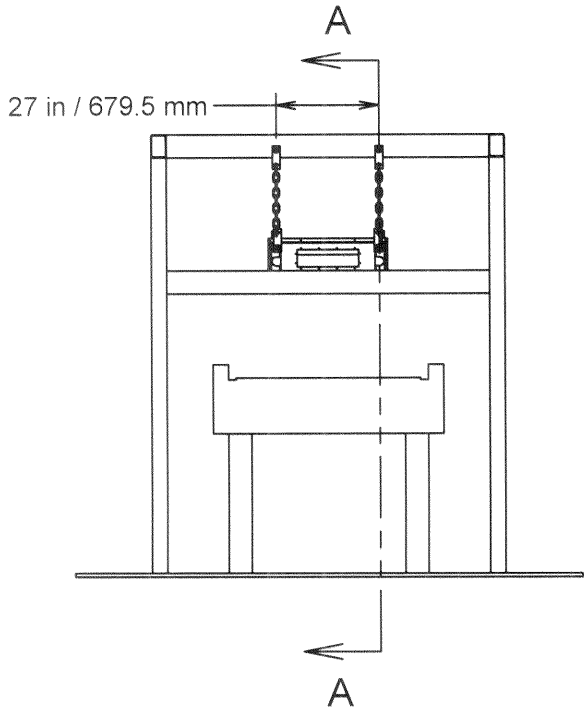

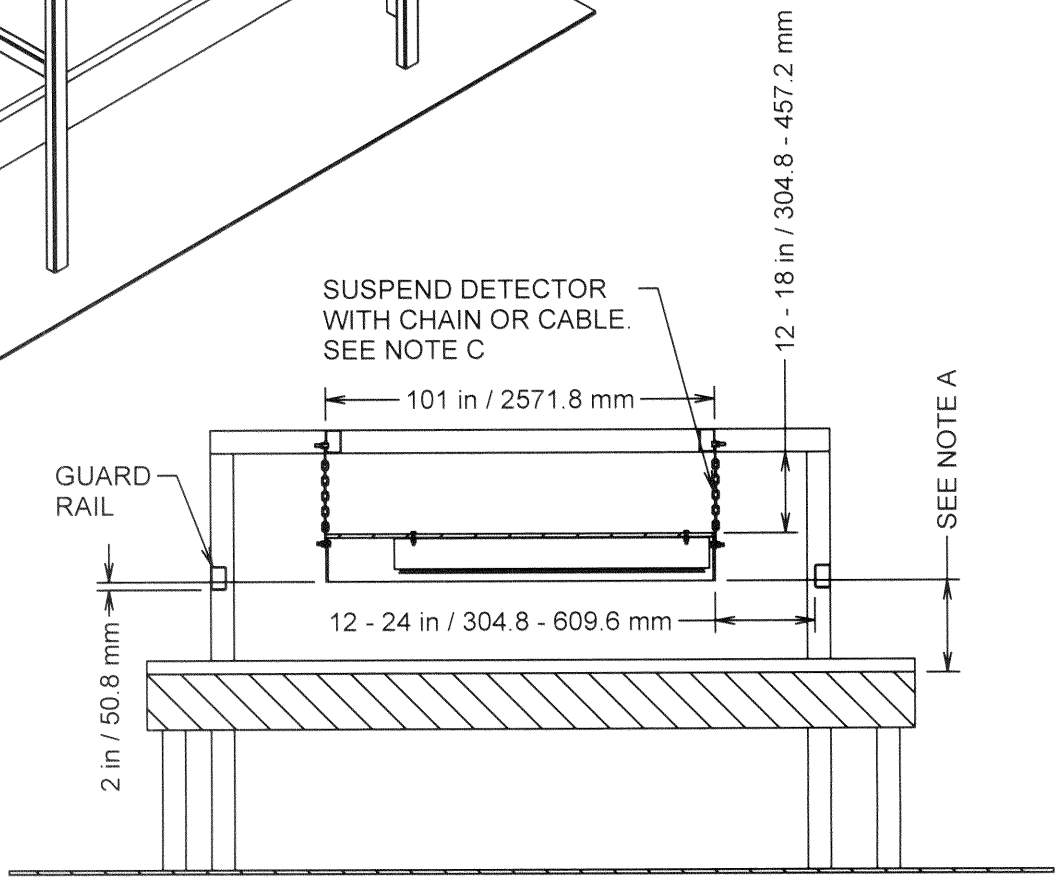

REVISION HISTORY			
REV	DESCRIPTION	DATE	APPROVED
1	VALID	3/12/2009	JGW

DWN	DATE	CHK	DATE	APP	DATE
CMC	1-3-2020				

DWG NUM: 4396-957 SCALE: 1/50

TITLE M 375P/4525-3500 CONVEYOR INSTALL

LUDLUM MEASUREMENTS, INC.
501 OAK STREET
SWEETWATER, TEXAS 79556

SERIES	SHEET
396	957

REVISION HISTORY			
REV	DESCRIPTION	DATE	BY
1	VALID	4/11/12	CMC
2	ADDED CONDUIT AND TEMPLATE	4/17/12	JGW
3	ADDED FROST LINE NOTE	3/31/21	ZJM

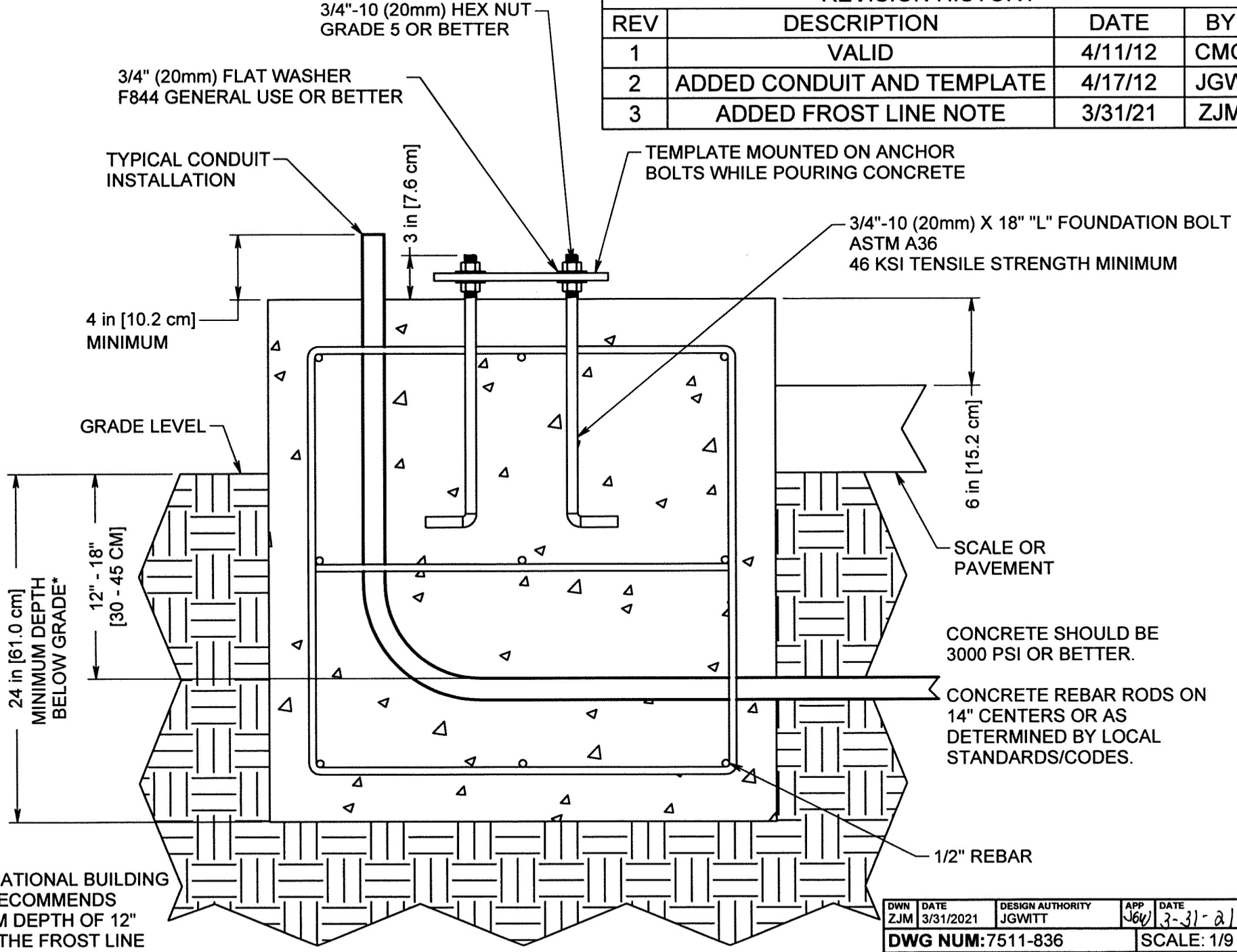

*INTERNATIONAL BUILDING CODE RECOMMENDS MINIMUM DEPTH OF 12" BELOW THE FROST LINE

DWN	DATE	DESIGN AUTHORITY	APP	DATE
ZJM	3/31/2021	JGWITT	JGW	3-31-21

DWG NUM: 7511-836 | SCALE: 1/9

TITLE: M 4525 ANCHOR BOLT&CONCRETE

LUDLUM MEASUREMENTS, INC.
501 OAK STREET
SWEETWATER, TEXAS 79556

SERIES	SHEET
511	836

DRAWING TO ACTUAL SIZE
MAY BE USED AS TEMPLATE

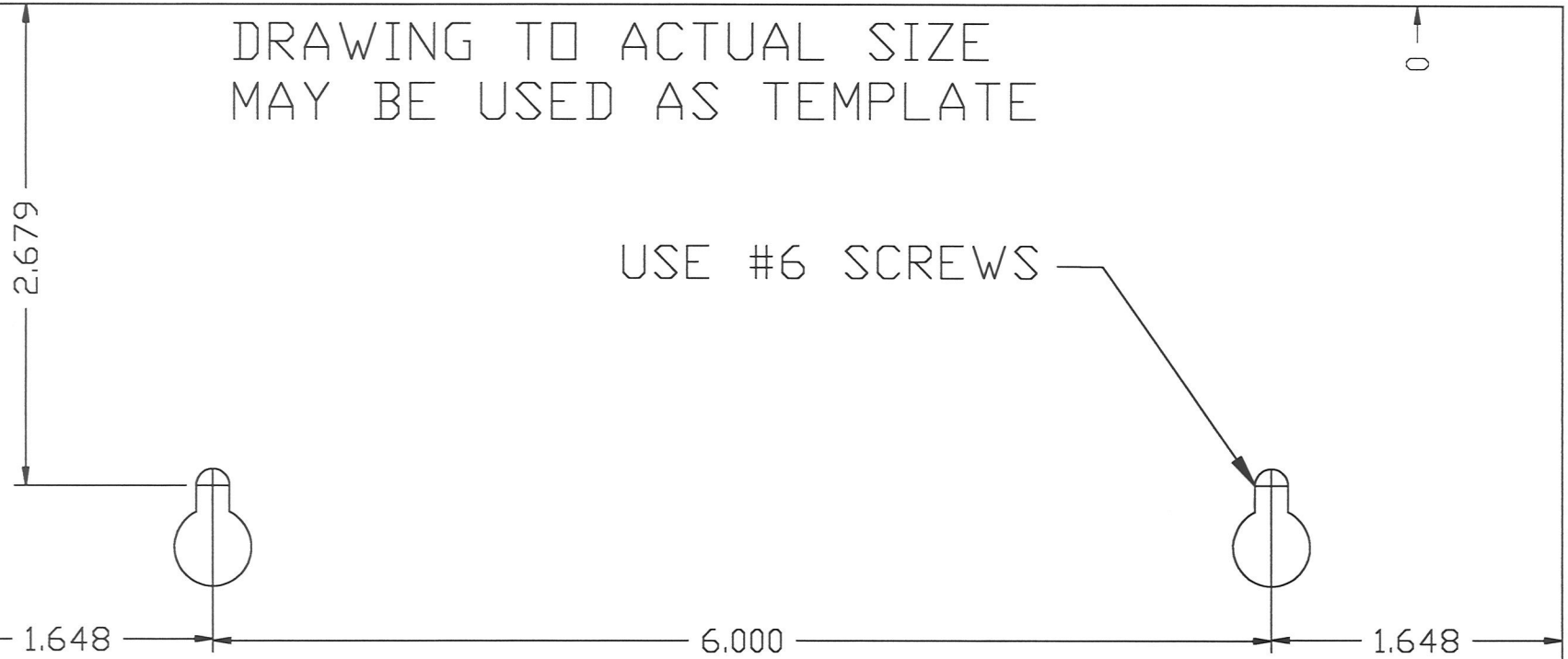

3

MINIMUM
CLEARANCE

3

ANCHORS MUST BE ABLE TO HOLD
12 POUNDS PER SCREW, AND MUST
BE APPROPRIATE FOR WALL
CONSTRUCTION

DESC: WALL MOUNTING GUIDE					
MODEL NO.: M 375					
DRW TJR	DATE 11-11-99	CHK	DATE	APP JGW	DATE 7-17-15
TOL: SHOP STD☒ OTHER			SCALE: FULL ☒ OTHER		
LUDLUM MEASUREMENTS, INC. 501 OAK STREET SWEETWATER, TEXAS 79556			SERIES 396		SHEET 166

Section A

Ethernet Network Settings

for Model 375 Series, 375P, and 4525/4530

This appendix describes how to configure the network settings for a 375 Series, 3276, 4525, or 4530 that has been configured for Ethernet using the new ESP32 Ethernet board. Ethernet boards using the Rabbit Ethernet chip do not support all the features described below.

Part Number	Description
4396-579	Model 375 Ethernet Hardware Kit
4498-958	Model 3276 Ethernet Hardware Kit
4511-954-01	Model 4525-5000 Main Module Ethernet Kit
4517-540	Model 4530 Parts Kit
4558-566	Model 375 Ethernet Option
4558-567	Model 375 Legacy Ethernet Option
4557-616	Model 375 Legacy ESP32-POE Assembly/Mount Board
4558-617	Model 375 ESP32-POE Assembly/Mount Board
4558-618	Model 4525 ESP-POE Assembly/Mount Board
5396-565	Model 4525 Main Board
5558-536	Model 4530 Main Board

Modes of Operation

The new firmware in the Ethernet kit supports all the instruments above using a single firmware version. The three different modes are:

1. Model 375 TCP – Compatible with the Model 375 Webpage and Universal software.
2. Model 375 UDP – Compatible with the Model 375 Ethernet software.
3. Model 4525 – Compatible with the Model 4525/4530.

The mode can be changed by selecting the radio button at the top of the network settings page and saving. The mode must be saved first before the corresponding parameters are shown.

NOTE:

It is no longer necessary to have custom firmware on the 375 main board to support Ethernet software using the 375 UDP mode. The UDP port and unit ID are now handled by the Ethernet board. If the firmware is already installed, those settings will be ignored in favor of the settings on the Ethernet board.

Finding the Instruments on the Network

The instruments can be found by launching the Device Finder utility. This can be downloaded from our website here:
https://ludlums.com/software/DeviceFinder.zip

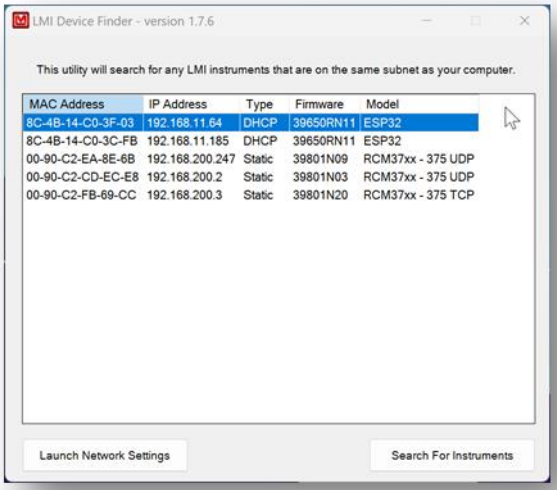

Device Finder will search the local subnet for any instruments on the network using a UDP broadcast message on UDP port 20034. This port must be opened on the computer running the utility for it to find any instruments.

The MAC address, IP address, Type (DHCP or Static), Firmware versions, and Model will be displayed.

MAC Addresses

MAC Address	Description
00-90-C2 or 00-C0-33	Rabbit RCM37xx (Obsolete)
8C-4B-14 or 08-3A-AF	ESP32 (New Board)

To open the instrument's network settings page, select the instrument from the list and click **Launch Network Settings.** This will open the default web browser to the IP address of the instrument. You can also type in the IP address into a web browser directly to access the network settings page.

NOTE:

RCM37xx – 375 UDP does not have a network settings page.

If an instrument does not show up in the list or was added to the network after the search was completed, click the **Search for Instruments** button to perform another search.

Network Settings

Using either the Device Finder app or typing the IP address directly into a web browser will open the Network Settings page of the Ethernet board. Depending on the current mode of operation, the network settings page will display different parameters. The modes will all have some common parameters such as serial number and network settings. Before the applicable settings are displayed, the mode must be changed using the password and Submit button.

Figure 1 - 375 TCP Mode

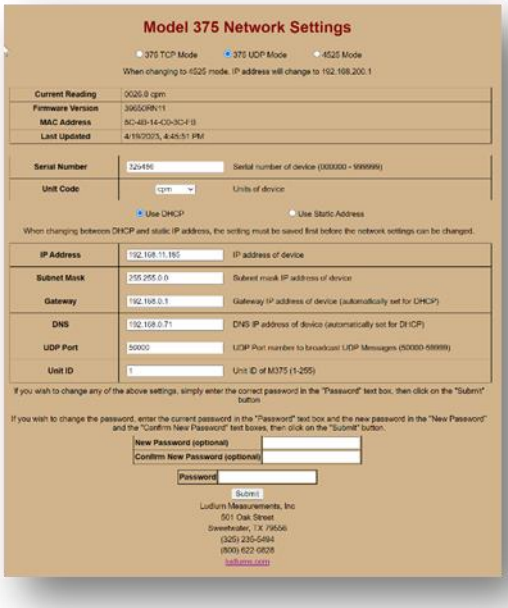

Figure 2 - 375 UDP Mode

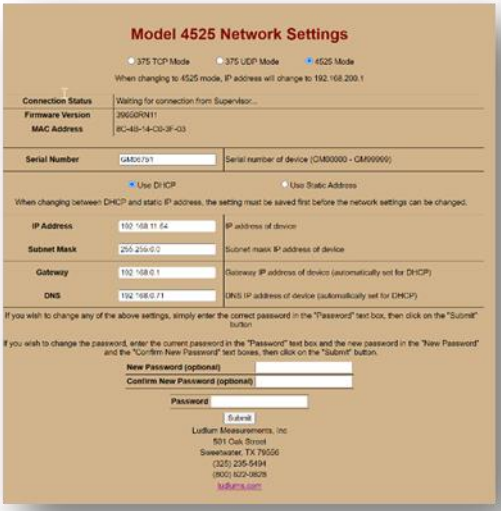

Figure 3 - 4525 Mode

Common Settings

The following settings are common to all operating modes.

DHCP/Static IP Address – These two radio buttons determine if the IP address and other network settings are set statically (Manually Assigned) or automatically through DHCP. When set to DHCP, the network settings shown are the values set by DHCP. To set the network settings manually, click the Use Static IP address radio button and fill in the appropriate values for the network settings.

When in DHCP mode, if the radiation monitor cannot get an IP address automatically, it will fall back to an IP address in the 169.254.x.x range.

Serial Number – This is the serial number stamped on the front of the instrument or on a sticker.

IP Address – An IP address is a unique IPV4 address assigned to each device on the network. It can be assigned manually or dynamically through DHCP.

Subnet Mask - A subnet mask is a 32-bit number created by setting host bits to all 0s and setting network bits to all 1s. In this way, the subnet mask separates the IP address into the network and host addresses.

Gateway – The Default Gateway IP address is the device that allows access to servers that are outside of the network.

DNS – The DNS IP address is the server that is responsible for converting human readable names into IP addresses.

Password Settings

To save settings, the correct password must be entered into the Password field. By default, the password is "password." To change the password, enter the new password in the New Password field and retype it in the Confirm New Password field. Then enter the current password and click the Submit button.

Model 375 TCP Mode

The TCP mode sends data to a user-defined IP address and user-defined TCP port number. This mode is compatible with both the 375 Webpage and Universal software. The following settings can be set in this mode.

Unit Code – Set the display units reported to the software. This must match the label on the front of the instrument. Choices are: µR/hr, mR/hr, R/hr, µSv/hr, mSv/hr, Sv/hr, µrem/hr, mrem/hr, rem/hr, cpm, cps, kcpm, and kcps.

TCP/IP Port – Sets the port number that the Supervisor computer is listening on. The default is 50000 but can be adjusted from 50000 to 59999.

Supervisor IP Address – Sets the IP address that the instrument will connect to. This is the computer running the Windows service of the Webpage or Universal software.

The data is sent every two seconds in the following format:

```
<?xml version="1.0" encoding="us-ascii" ?>
<area_monitor rev ="1.0" serial="12345">
 <status>
  <rate>9999.9</rate>
  <units_code>99</units_code>
  <audio>1</audio>
  <alarm1>1</alarm1>
  <alarm2>1</alarm2>
  <over_range>1</over_range>
```

```
    <monitor>1</monitor>
    <error_code>9</error_code>
  </status>
</area_monitor>
```

The data has been formatted here to show the structure more easily. The actual data does not have line breaks after each section and is one continuous line.

Model 375 UDP Mode

The UDP mode sends data to a user-defined UDP port number. This mode is compatible with the Model 375 Ethernet software. The data are sent using a broadcast IP Address of 255.255.255.255. Any device on the same subnet will be able to see the data on the correct UDP port number. The following settings can be set in this mode.

Unit Code – Set the display units reported to the software. This must match the label on the front of the instrument. Choices are: µR/hr, mR/hr, R/hr, µSv/hr, mSv/hr, Sv/hr, µrem/hr, mrem/hr, rem/hr, cpm, cps, kcpm, and kcps.

UDP Port – Sets the UDP port that the data will be broadcasted. This is adjustable from 50000 to 59999.

Unit ID – This is a unique ID number assigned to each instrument on the network. Typically instrument one is assigned a unit ID of 1, the next one is 2, etc.

NOTE:

> Previous versions of the Ethernet board required a special firmware to be installed in the Model 375 to be able to set the unit ID and UDP port. On the newer versions, this is set here in the network settings page, so no special firmware is required. If the instrument has the special firmware, the unit ID and UDP port are ignored, instead using the values set on the network settings page.

The data is formatted as a string, very much like the standard RS-232 data output. See below:

```
Byte 1     L
Byte 2     M
Byte 3     I
Byte 4     0            x
Byte 5     x            x
Byte 6     x     OR     x
Byte 7     x            x
Byte 8     .            .
Byte 9     x            0
Byte 10    Audio Status = 1 = on
Byte 11    Alarm Status = 1 = on
Byte 12    Alert Status = 1 = on
Byte 13    Over Range Status = 1 = on
Byte 14    Monitor Status = 1 = on
Byte 15    Error Code
Byte 16    UNIT ID CHAR 1
Byte 17    UNIT ID CHAR 2
Byte 18    UNIT ID CHAR 3
Byte 19    PORT NUM CHAR 1
Byte 20    PORT NUM CHAR 2
Byte 21    PORT NUM CHAR 3
Byte 22    PORT NUM CHAR 4
Byte 23    3          Firmware version of Model 375|
Byte 24    9
Byte 25    6
Byte 26    x
Byte 27    x
Byte 28    n
Byte 29    x
Byte 30    x
Byte 31    3          Firmware version of Ethernet board
Byte 32    9          Note: The firmware version of the
Byte 33    8          Ethernet board is not sent out the
Byte 34    x          serial port of the Model 375!
Byte 35    x
Byte 36    n
Byte 37    x
Byte 38    x
Byte 39        Carriage Return (0DH)
Byte 40        Line Feed (0AH)
```

If the firmware in the instrument is standard, then the values for the instrument firmware in the data output will all be the letter “X.”

Model 4525 Mode

The Model 4525 mode is compatible with both the 4525 and 4530 gate monitors. The Ethernet board waits for a connection from the Supervisor computer on TCP port 23. Once the connection is established, it begins passing data back and forth from the Supervisor computer and the gate monitor’s serial port.